31W4-3TC22-1

TM 11-355B

WAR DEPARTMENT TECHNICAL MANUAL

TELEGRAPH TERMINAL SET

TC-22-B (CARRIER)

WAR DEPARTMENT • OCTOBER 1946

WAR DEPARTMENT TECHNICAL MANUAL

TM 11-355B

This manual supersedes TM 11-355B, Telegraph Terminal CF-2-B (Carrier), 8 November 1943, including C1, 19 February 1945.

TELEGRAPH TERMINAL SET

TC-22-B (CARRIER)

WAR DEPARTMENT • *OCTOBER 1946*

United States Government Printing Office
Washington: 1946

WAR DEPARTMENT
Washington 25, D. C., 30 October 1946

TM 11–355B, Telegraph Terminal Set TC–22–B (Carrier), is published for the information and guidance of all concerned.

[AG 300.7 (8 Jul 46)]

BY ORDER OF THE SECRETARY OF WAR:

OFFICIAL:
EDWARD F. WITSELL
Major General
The Adjutant General

DWIGHT D. EISENHOWER
Chief of Staff

DISTRIBUTION:
AAF (5) ; AGF (5) ; T (5) ; Dept (2) ; Base Comd (2) ; Arm & Sv Bd (1) ; Tech Sv (2) ; AMA (2) ; Dep 11 (2) ; Lab 11 (2) ; 4th & 5th Ech Maint Shops 11 (2) ; A (ZI) (2) ; Two (2) copies to each of the following T/O & E's: 1–452; 1–562; 1–600, (CG), (RB) ; 1–1037; 11–7; 11–18; 11–97; 11–158; 11–107; 11–127; 11–500 (EF) ; 11–587; 11–592; 11–597.

For explanation of distribution formula, see FM 21–6.

CONTENTS

		Paragraph	Page
PART ONE.	**INTRODUCTION.**		
Section I.	Description of Telegraph Terminal Set TC–22–B (Carrier)	1–5	1
II.	Application	6–7	11
III.	Unpacking, setting up, and repacking instructions	8–11	12
PART TWO.	**OPERATING INSTRUCTIONS.**		
Section IV.	Equipment connections and initial adjustments	12–15	15
V.	System line-up	16–23	24
VI.	Summary of procedure for placing equipment in service	24	31
VII.	Routine checks of performance	25–27	32
PART THREE.	**MAINTENANCE INSTRUCTIONS.**		
Section VIII.	Preventive maintenance techniques	28–31	34
IX.	Preventive maintenance check list	32	41
X.	Lubrication	33	41
XI.	Moistureproofing and fungiproofing	34–37	41
PART FOUR.	**AUXILIARY EQUIPMENT.** (Not used.)		
PART FIVE.	**REPAIR INSTRUCTIONS.**		
Section XII.	General repair procedure	38–39	49
XIII.	Detailed functioning of equipment	40–56	49
XIV.	Trouble location	57–59	79
XV.	Repairs	60–63	83
APPENDIX.	**REFERENCES**		90
INDEX.			93

DESTRUCTION NOTICE

WHY—To prevent the enemy from using or salvaging this equipment for his benefit.

WHEN—When ordered by your commander.

HOW—1. Smash—Use sledges, axes, handaxes, pickaxes, hammers, crowbars, heavy tools.
2. Cut—Use axes, handaxes, machetes.
3. Burn—Use gasoline, kerosene, oil, flame throwers, incendiary grenades.
4. Explosives—Use firearms, grenades, TNT.
5. Disposal—Bury in slit trenches, fox holes, other holes. Throw in streams. Scatter.

USE ANYTHING IMMEDIATELY AVAILABLE FOR DESTRUCTION OF THIS EQUIPMENT

WHAT—1. Smash—Open carrying-case cover, panels, castings, relays, meters, resistors, capacitors, switches, nameplates, and other identifying marks, vacuum tubes.
2. Cut—All wiring and cables, relay and transformer windings.
3. Bend and/or break—Framework and panels.
4. Burn—Carrying-case covers with circuit labels, Technical Manuals, straps, containers, etc.
5. Bury or scatter—Any or all the above pieces after smashing, cutting, bending, or breaking.

DESTROY EVERYTHING

SAFETY NOTICE

Voltages used in this equipment are high enough to endanger life and may be fatal if contacted. Do not contact the high-voltage plate circuits and the a-c input connections. Perform all tests with insulated test leads. When replacing parts or making wiring changes, remove the fuses associated with that particular circuit, or if the entire system is affected, disconnect the a-c power cord.

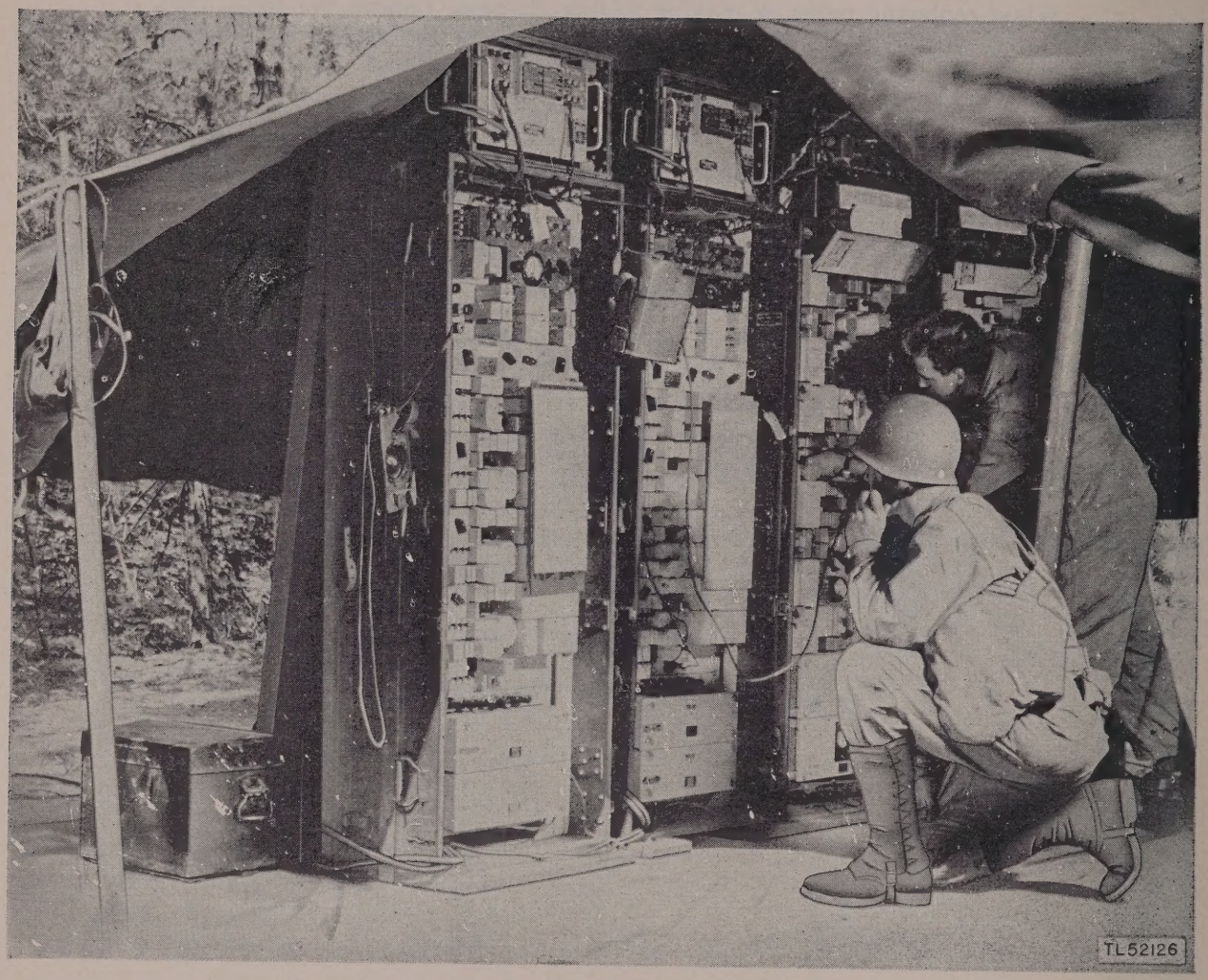

Figure 1. Typical installation of tactical carrier equipment.

This manual supersedes TM 11-355B, Telegraph Terminal CF-2-B (Carrier), 8 November 1943, including C 1, 19 February 1945

PART ONE

INTRODUCTION

Section I. DESCRIPTION OF TELEGRAPH TERMINAL SET TC-22-B (CARRIER)

1. General

a. Telegraph Terminal CF-2-B (Carrier) is the main component of Telegraph Terminal Set TC-22-B (Carrier). Other components are one Chest BC-5, two Clamps TM-106, two Ground Rods MX-148/G, 2 pounds of Wire W-2, and 150 feet of Wire W-69-A.

b. Telegraph Terminal CF-2-B (Carrier) is used in a four-channel voice-frequency carrier telegraph system, using eight frequencies in the range from 500 to 2,050 cycles. The system provides for two-way transmission, each telegraph channel using two different carrier frequencies for the two directions of transmission.

c. The system is designed for operation over one channel of a four-channel carrier telephone system using Telephone Terminal CF-1-(*) (Carrier), described in TM 11-341. When used with this system, the telegraph terminals are connected on a two-wire basis to the telephone terminals at each end of the carrier telephone circuit. This is done in the same way that telephone sets are connected to the other three circuits of the carrier system.

d. Telegraph Terminal CF-2-A (Carrier), described in TM 11-355, is made up of two bays of equipment of two channels each. Telegraph Terminal CF-2-B (Carrier) provides the equipment for four channels in a single bay. The general design of the circuits of the two types of terminals is the same, and may operate a two-wire, four-channel system with Telegraph Terminal CF-2-B (Carrier) at one end and Telegraph Terminal CF-2-A (Carrier) at the other end. Telegraph Terminal CF-2-B (Carrier), however, is arranged for four-wire as well as two-wire operation.

e. In addition to using it with the four-channel telephone system, Telegraph Terminal CF-2-B (Carrier) may be operated over any two-wire or four-wire circuit that meets the requirements for good telephone service. The two-wire or four-wire circuit may or may not be equipped with voice-frequency repeaters. Two Telegraph Terminals CF-2-B (Carrier) at each end of a four-wire circuit can provide eight two-way carrier telegraph channels. In this case, all eight frequencies are transmitted over each pair of conductors in opposite directions.

f. This telegraph system is designed for operation over repeatered or nonrepeatered circuits. The net loss of these circuits must not be more than 25 decibels (db) between telegraph terminals. The carrier currents are ordinarily transmitted at a —10 dbm (decibels referred to 1 milliwatt) level from the originating terminal, but a hand control permits raising the level to 0 dbm under certain extreme range conditions.

g. The ranges and losses between Telephone Terminals CF-1-(*) (Carrier) of a system are given in TM 11-341. Ordinarily the telephone and telegraph terminals are at the same location. When this is the case, the low sending level (—10 dbm) is used at each telegraph terminal. The telegraph terminals may be in separate locations, however, provided the net loss of the two-wire circuit between the telegraph and telephone terminals is not more than 8 db. Such a two-wire circuit may be used at both ends of the system. If the total net loss between telegraph terminals exceeds 15 db, operate at the higher sending level (0 dbm).

h. Telegraph Terminal CF-2-B (Carrier) is arranged to operate with different types of loop circuits. These loops connect to the telegraph terminal through line units, telegraph switchboards, or telegraph repeaters. The loop circuit of each channel contains a switch which is set by hand to provide the proper

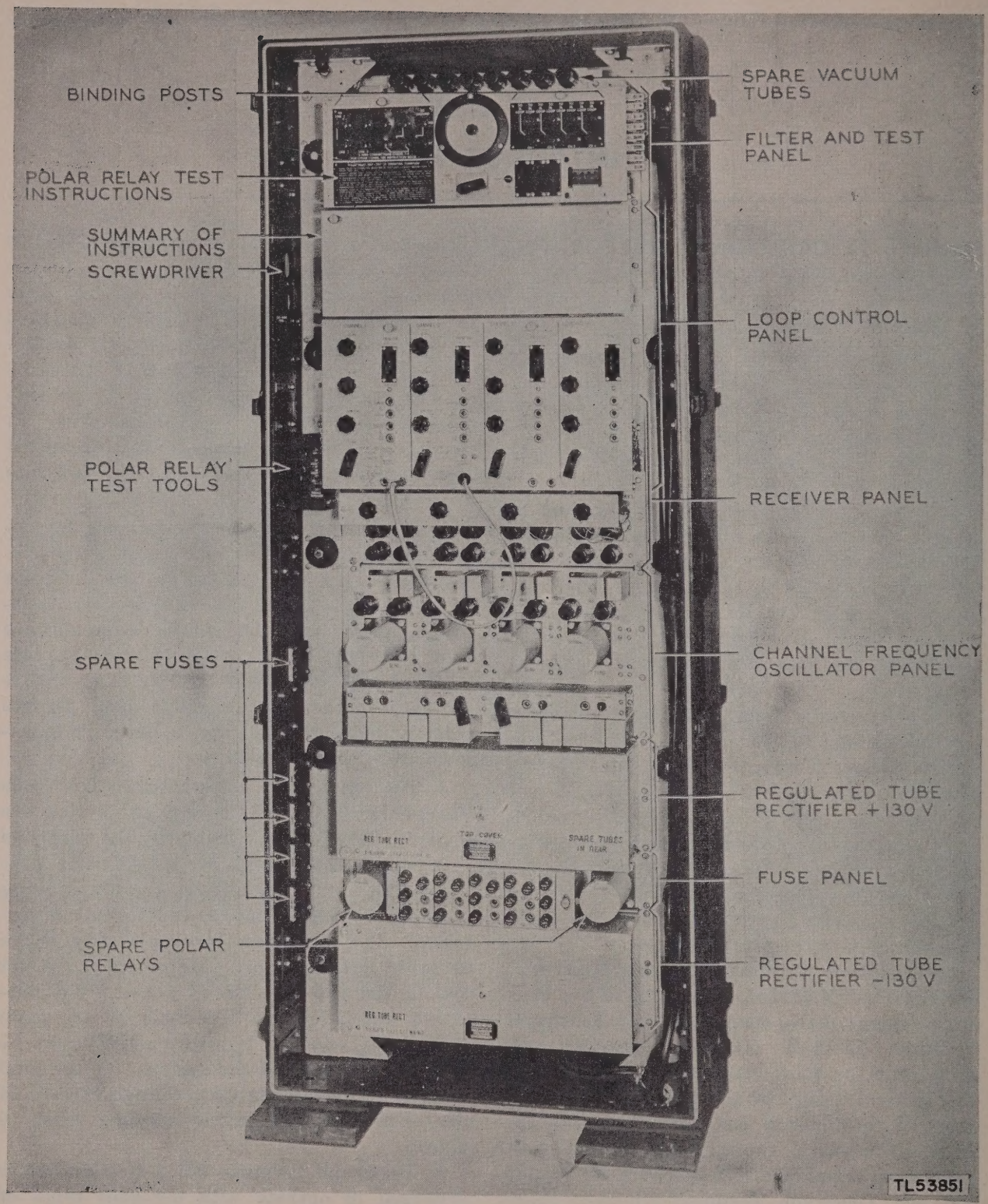

Figure 2. Panel lay-out of Telegraph Terminal CF-2-B (Carrier).

termination for the equipment at the distant end of the loop. Half-duplex operation (sending and receiving over the same loop), or full-duplex operation (sending over one loop and receiving over a second loop), is provided over each channel of the telegraph system. The telegraph circuits allow satisfactory transmission at teletypewriter speeds of 60 or 75 words per minute.

i. A 50- to 60-cycle, 115-volt or 230-volt (±10 percent) a-c power supply is needed at each telegraph terminal for operating the system. The maximum power consumption of one telegraph terminal is about 275 watts.

j. Telegraph Terminal CF–2–B (Carrier) should be located in a place free from abnormal vibration. Although it is moisture-resistant, protect the equipment from outside weather conditions.

2. Table of Major Components

a. The items listed in table I are the major components of Telegraph Terminal Set TC–22–B (Carrier). The data given below are for the equipment unpacked and ready for use.

Table I. Major Components of Telegraph Terminal Set TC–22–B (Carrier)

Quantity	Component	Weight (lb)	Dimensions (in.)	Volume (cu ft)
1	Telegraph Terminal CF–2–B (Carrier).	575	27⅛ x 19 x 66	20.3
1	Chest BC–5	35	28⅞ x 18⅛ x 12	3.6
2	Clamp TM–106			
2	Ground Rod MX–148/G	9.5		
2 lb	Wire W–2	2		
150 ft	Wire W–69–A			

Note: This list is for general information only. See appropriate publications for information pertaining to requisition of spare parts.

b. Telegraph Terminal CF–2–B (Carrier) is a single bay holding the equipment for four channels. The equipment is mounted in a wooden carrying case having removable front and rear covers, and is equipped with six handles. Figure 2 shows a front view of the bay with the cover removed and each of the equipment panels designated. Figure 3 shows a front view of the bay with the cover in place, and figure 4 shows a rear view of the bay with the cover removed. The carrying case is 5 feet 6 inches high, 2 feet 3½ inches wide, and 1 foot 7 inches deep. It weighs 575 pounds.

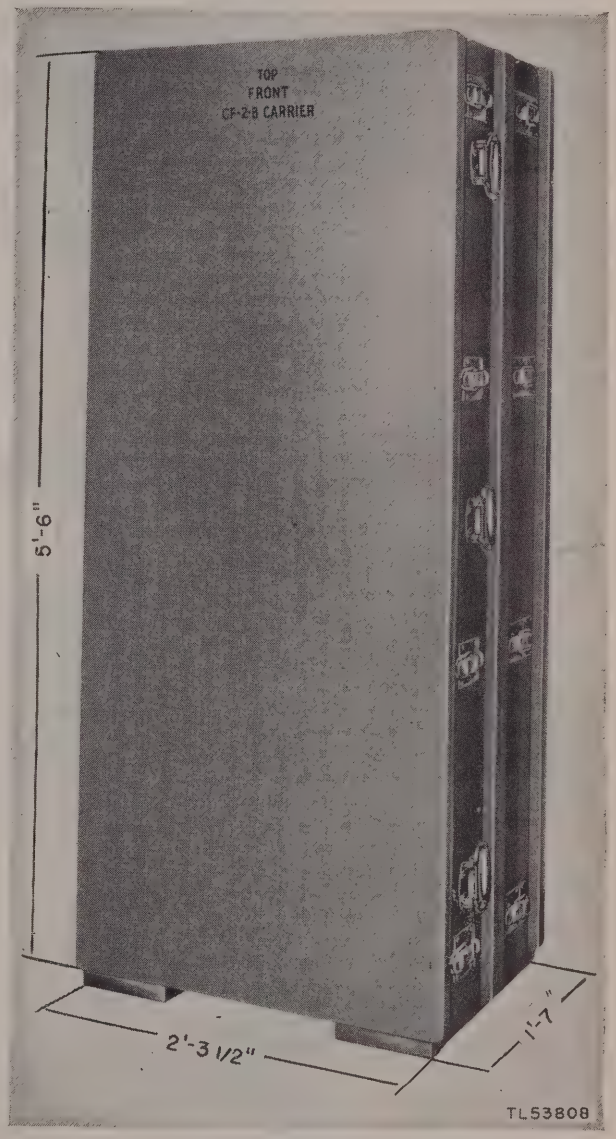

Figure 3. Telegraph Terminal CF–2–B (Carrier), covers in place.

c. The carrying case mounts five individual panel units and two rectifier power units. The panels are attached to a framework which is fastened to the wooden case by means of rubber shock absorbers. Three of the apparatus mountings at the top of the bay are hinged at the bottom to permit them to be swung open so

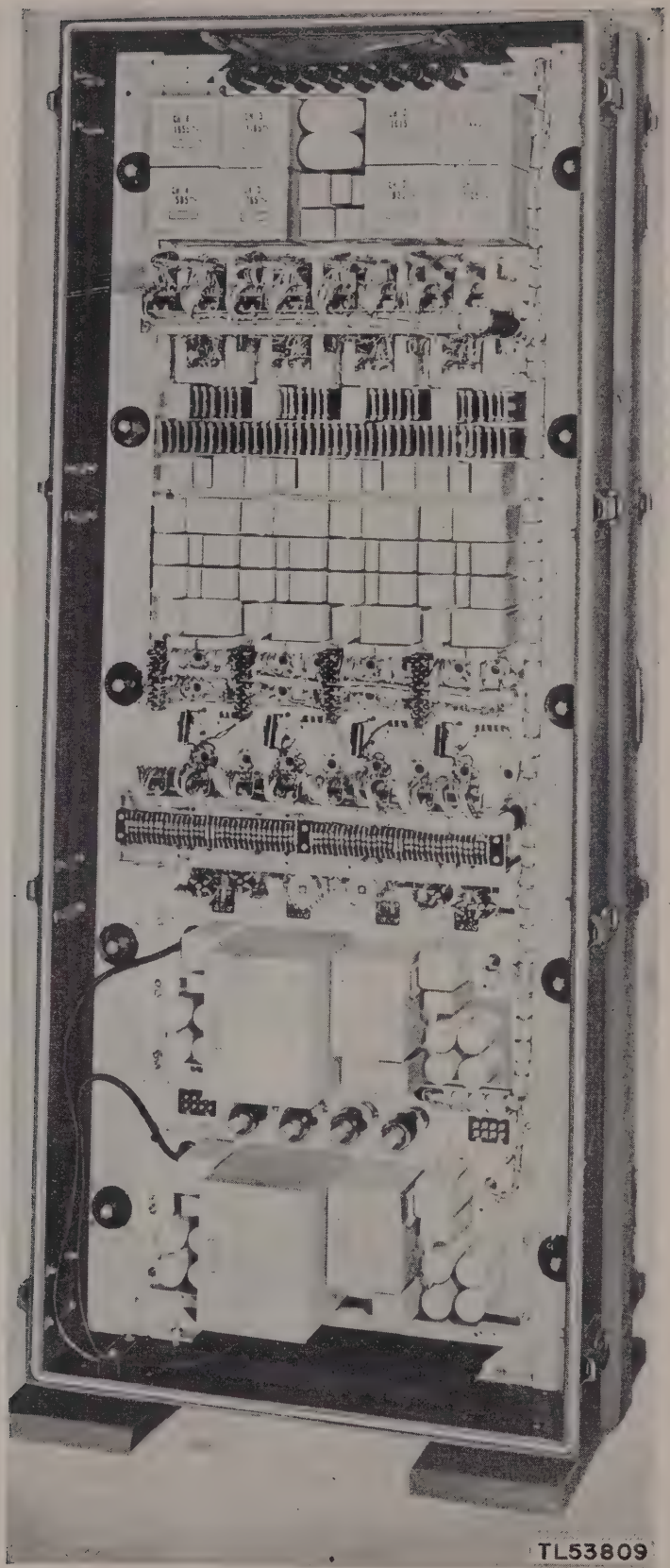

Figure 4. Telegraph Terminal CF–2–B (Carrier), rear view.

that access can be gained to other apparatus for maintenance and repair. The fuse panel at the bottom of the bay is hinged at the left to permit opening it for repairs.

d. The apparatus and wiring of all four channels are the same, except that the oscillator and band-pass filter of each are to be used with only two particular channel frequencies, one high and one low. The channel apparatus is mounted on the panels in vertical alignment.

3. General Functioning of Telegraph Terminal CF–2–B (Carrier)

a. FILTER AND TEST PANEL (fig. 5). This panel provides the binding posts for connection to the line and loop circuits. Protectors are connected between these binding posts and the equipment to protect the equipment from foreign voltages that may be picked up by the line or loop circuits. This panel also provides the sending and receiving carrier filters for each channel and the testing circuit for testing and adjusting polar relays.

(1) *SEND FILTER switch.* The setting of this switch selects either a high or low sending filter for each channel. The switch setting should correspond to the setting of the SEND FREQ switch.

(2) *METER switch.* This switch conditions the meter for different current and voltage measurements. For measuring the output of oscillators, turn it to the OSC TEST position; for all other measurements, leave it in the NORMAL position.

(3) *RELAY TEST keys.* These keys are used to make bias, sensitivity, and operate and non-operate *release* tests on polar relays.

b. LOOP CONTROL PANEL (fig. 6). This panel contains the equipment for testing and adjusting the loop circuits and also contains the cord and plug for connecting the meter to various circuits.

(1) *PRINTER key.* The setting of this key arranges a monitoring teletypewriter, when connected at the fuse panel, to operate either towards the line or the loop. When the key is in the SEND CARR position, the teletypewriter is connected to communicate with the distant terminal; when the key is in the SEND LOOP position, the teletypewriter is connected to communicate with the loop.

(2) *SL RES potentiometer.* This potentiometer is used to adjust the current in the sending loop.

(3) *RL RES potentiometer.* This potentiometer is used to adjust the current in the receiving loop.

(4) *SEND BIAS potentiometer.* The adjustment of this potentiometer provides a means of obtaining unbiased signals from the loop circuit.

(5) *LOOP switch.* The setting of this switch arranges the loop circuit for full-duplex polar, half-duplex polarential, and either half- or full-duplex neutral to positive or negative battery.

(6) *SL CURRENT and RL CURRENT jacks.* These jacks provide a means of connecting the meter to the sending or receiving loops respectively when it is desired to measure the current flow.

(7) *RECEIVER CURRENT jack.* This jack provides a means of connection to the meter circuit when it is desired to measure the level of received carrier current.

(8) *SEND BIAS jack.* The meter plug is inserted in this jack when adjusting the SEND BIAS potentiometer to compensate for bias in the signals obtained from the loop circuit.

(9) *RELAY TEST jack.* This jack, located in the loop control panel for channel 1, is used to connect the meter to the relay testing circuit located in the filter and test panel. To the right of this jack a dummy jack is located. The plug of the meter cord, when not in use, is inserted in this dummy jack.

(10) *−TG and +TG jacks.* These jacks, located in the loop control panel for channel 3, are used for connection to the meter circuit when measuring the output of the negative and positive rectifiers.

c. RECEIVER PANEL (fig. 7). This panel contains the four tubes V1, V2, V3, and V4, used in the carrier receiver circuit. It also contains a REC INPUT switch for each channel which adjusts the gain of the receiver circuit. This switch is also used in testing. It is set to the TST position to use the oscillator output to test the receiver circuit locally. In the MK and SP positions it operates and holds the receive relay to mark and space respectively.

d. CHANNEL FREQUENCY OSCILLATOR PANEL (fig. 8). The frequency for each channel is provided by this panel as well as the SEND re-

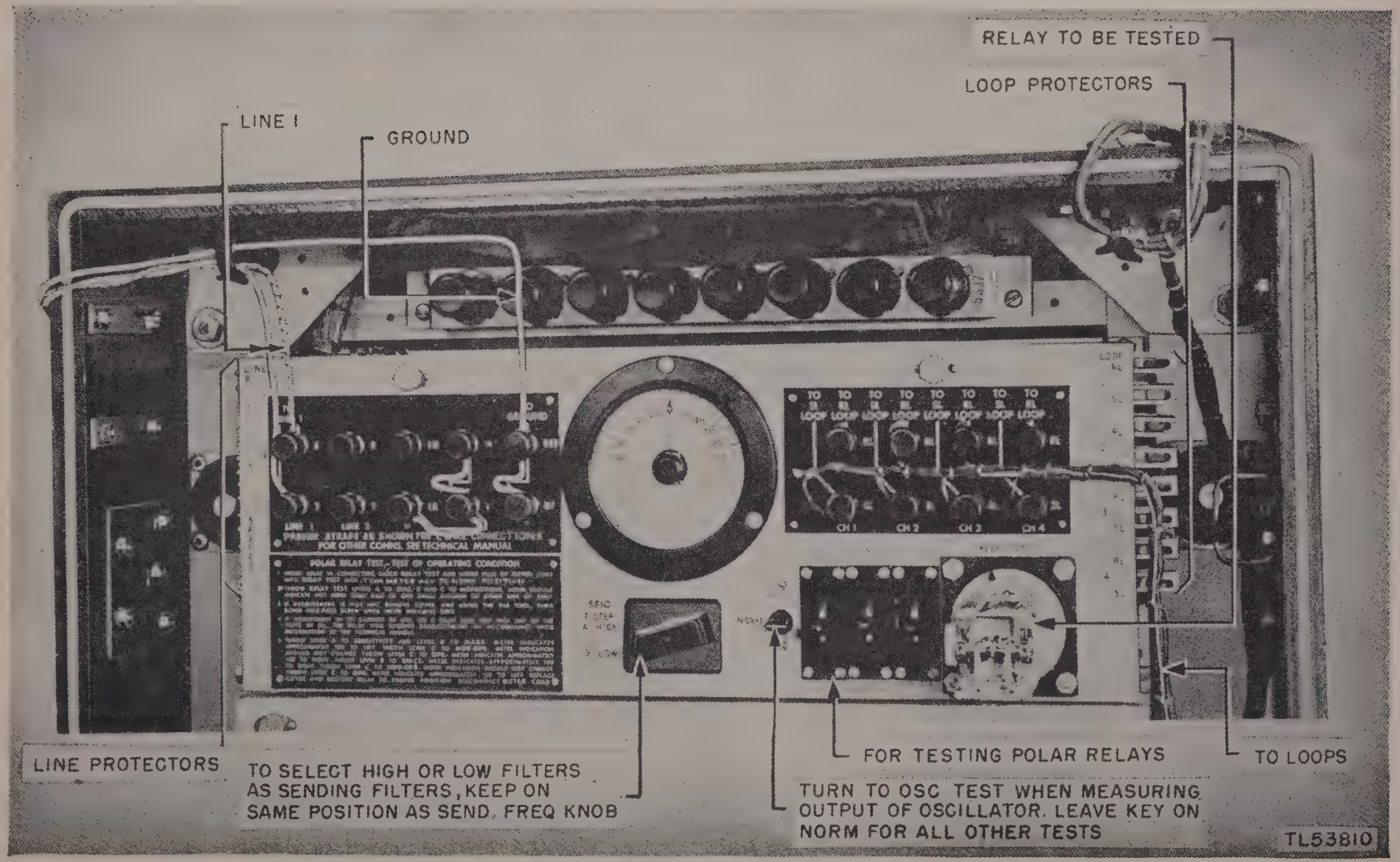

Figure 5. Filter and test panel.

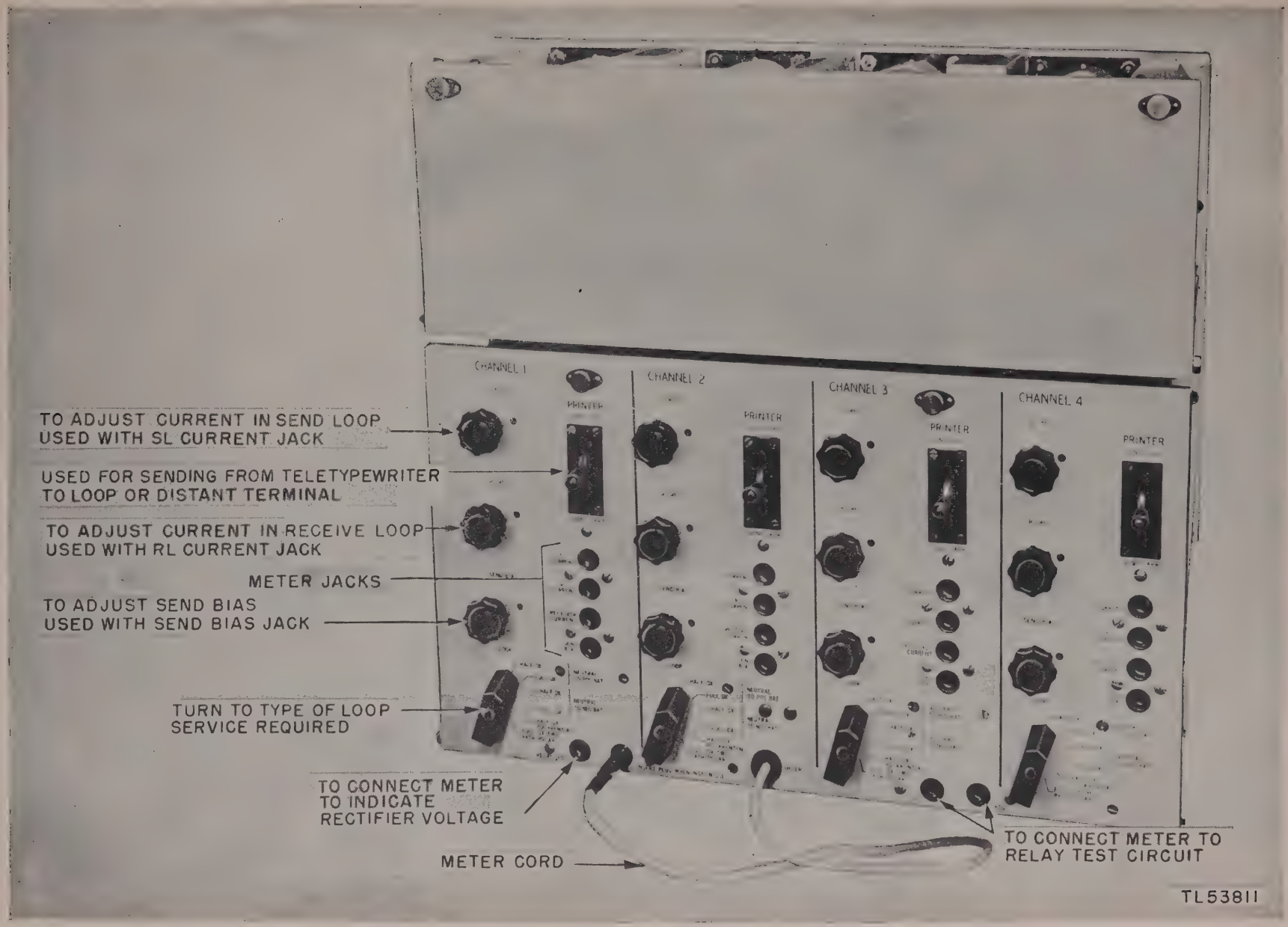

Figure 6. Loop control panel.

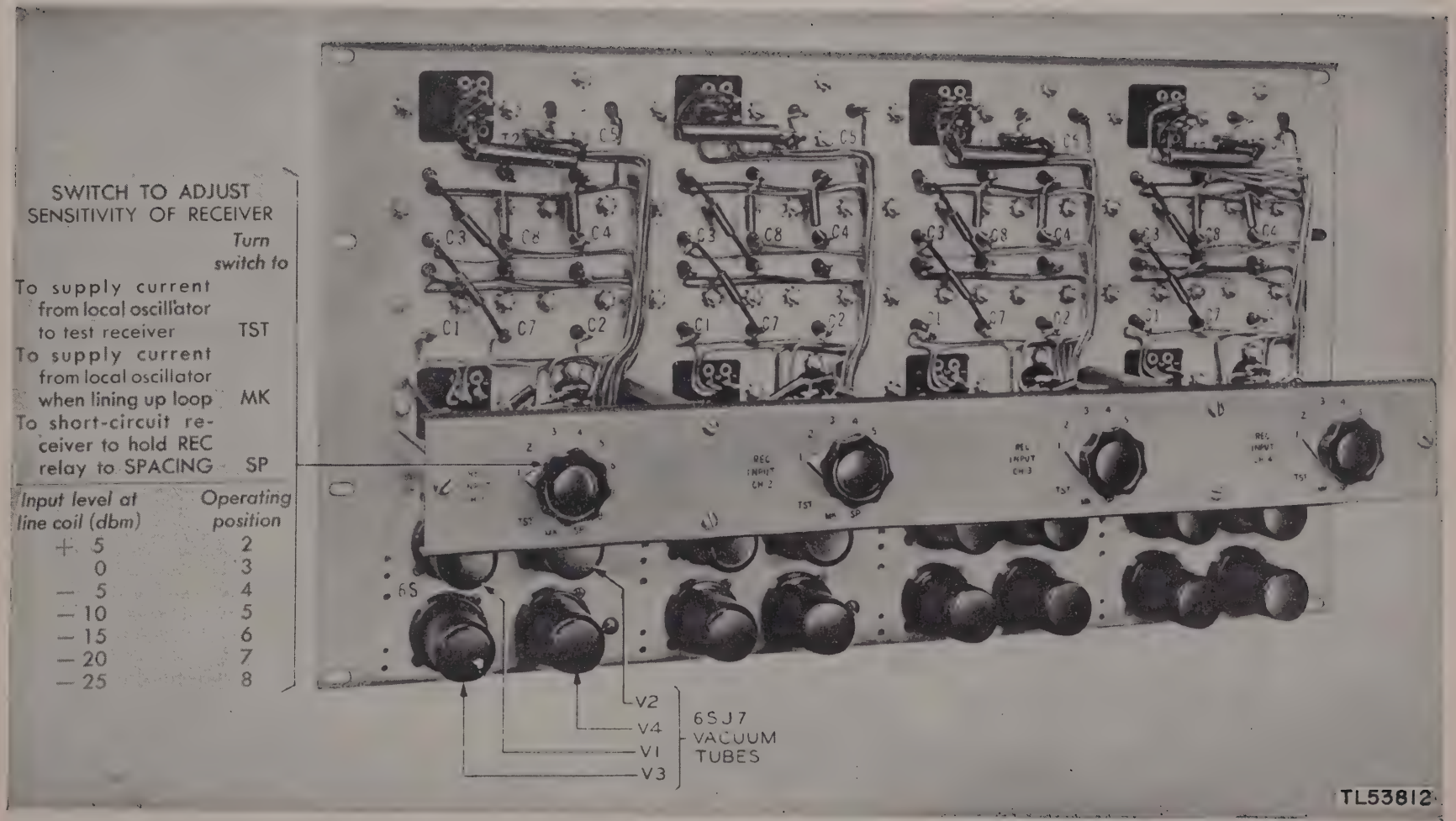

Figure 7. Receiver panel.

relays which control the transmission of each frequency to the line.

(1) *OSC OUT jack.* The plug of the meter cord is inserted in this jack when measuring the output of the oscillator.

(2) *SEND CARR key.* In the NORMAL position of this key the SEND relay is permitted to follow signals from the loop circuit. In the MK and SP positions, used in system line-up, the SEND relay is held to its mark and space contact respectively.

(3) *SEND LEVEL switch.* This switch adjusts the carrier output level to either LOW (—10dbm) or HIGH (0 dbm).

(4) *SEND FREQ switch.* This switch is set to either the B (LOW) or A (HIGH) position depending on whether it is desired to send high or low frequency from that terminal. The setting of this switch must conform with the setting of the SEND FILTER switch in the filter and test panel.

e. FUSE PANEL (fig. 9). The fuses for all filament, plate, positive telegraph, and negative telegraph circuits are mounted in this panel. The teletypewriter monitoring jacks are also on this panel.

f. RECTIFIER PANELS. (1) *General.* The positive rectifier located above the fuse panel, supplies the heater current for tubes of channels 1 and 2 and the positive plate, and telegraph cur-

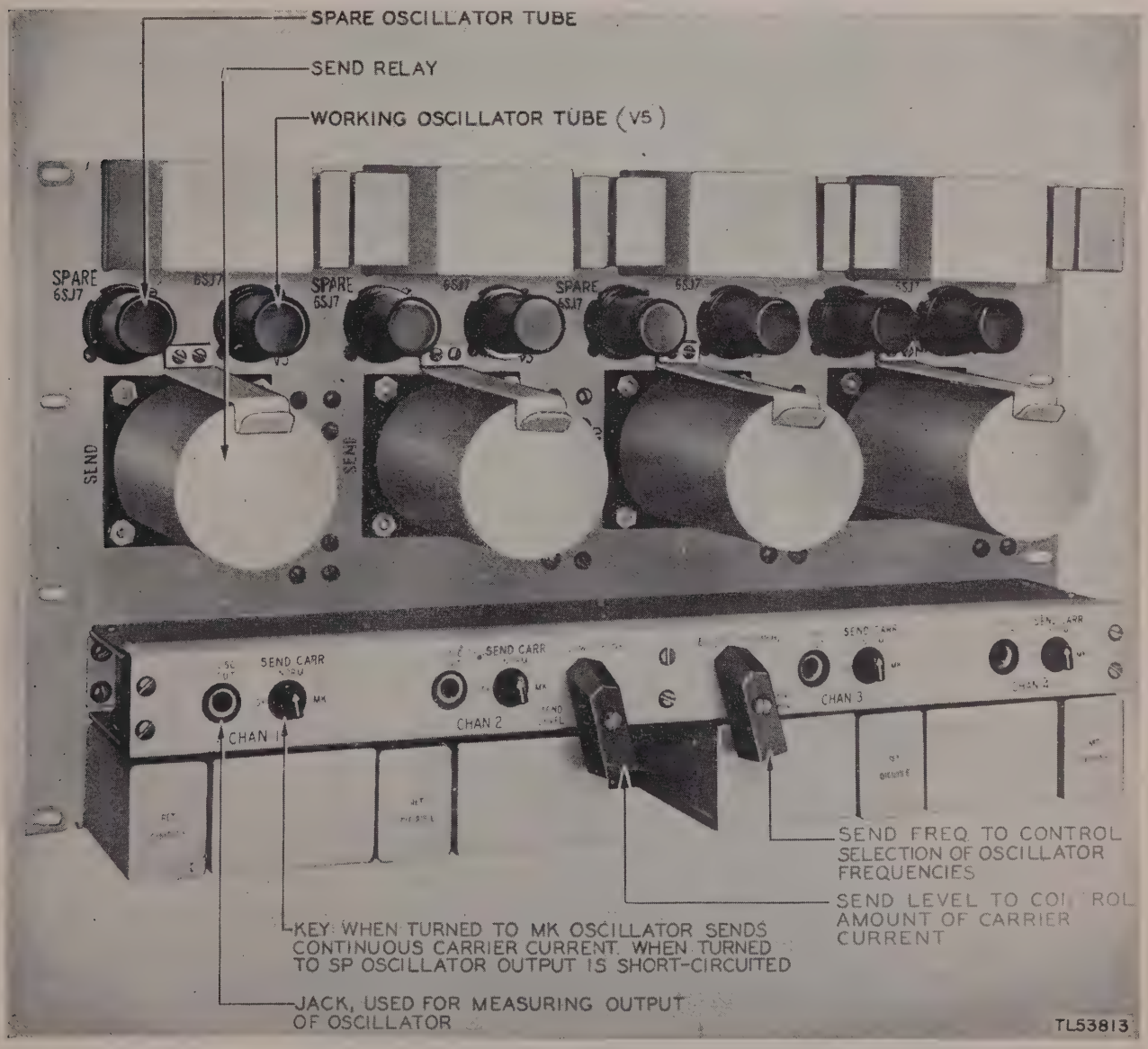

Figure 8. Oscillator panel.

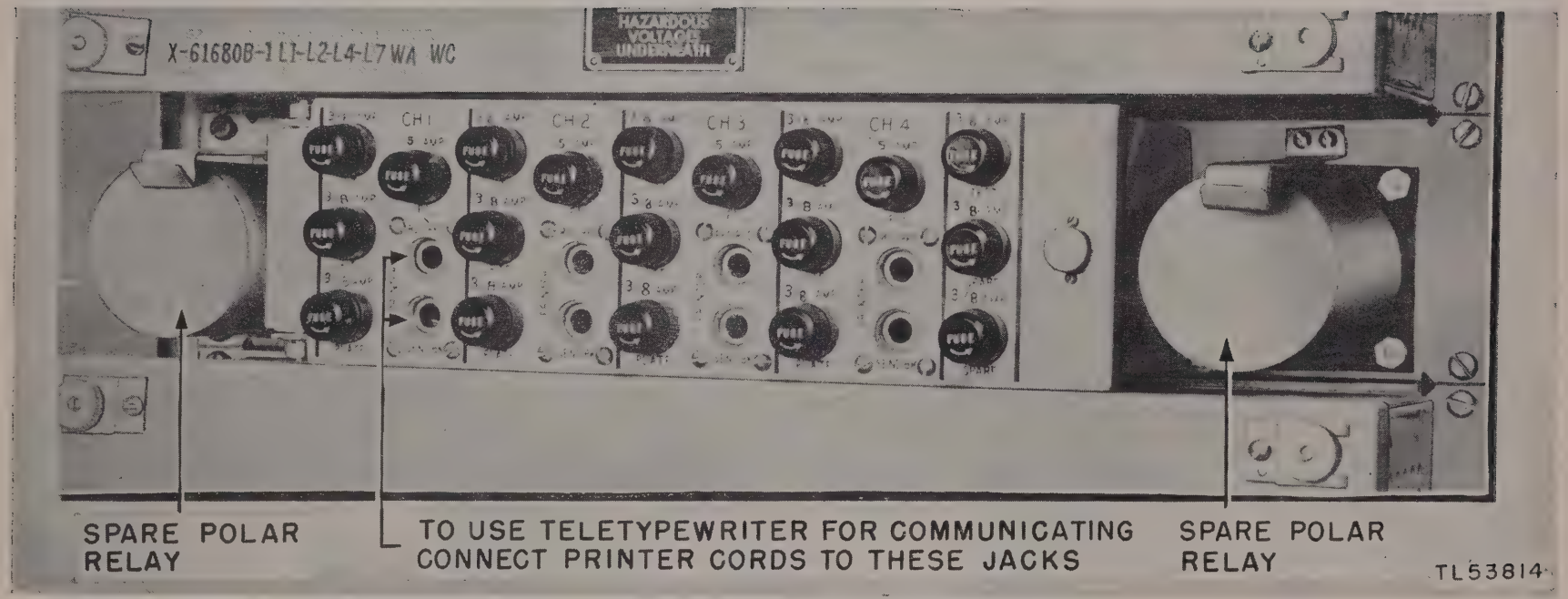

Figure 9. Fuse panel.

rent. The negative rectifier located below the fuse panel supplies the heater current for channels 3 and 4 and the negative telegraph current.

(2) *Rheostat +TG and —TG.* Rheostat +TG and —TG, reached through the cover of each rectifier, controls the grid voltage of the tubes V1 and V2 to allow regulation of the rectifier's output voltage.

4. Electrical Characteristics

a. GENERAL. Two frequencies are assigned to each channel, a different frequency being used for each direction of transmission. In the system lay-out, one terminal (usually the terminal of higher command) is designated as terminal A and the other as terminal B. The oscillator at terminal A is set to deliver the higher of the two frequencies assigned to that channel and the oscillator at terminal B is set to deliver the lower frequency. The frequencies used for the four channels are as follows:

Table II. Channel frequencies

Channel	Terminal A		Terminal B	
	Sending	Receiving	Sending	Receiving
1	1,445	1,105	1,105	1,445
2	1,615	935	935	1,615
3	1,785	765	765	1,785
4	1,955	595	595	1,955

b. OUTPUT AND INPUT LEVELS. Ordinarily the telephone and telegraph terminals are at the same location, and operate at the low sending level (—10 dbm). The telegraph terminals may be at separate locations, however, provided the net loss of the two-wire circuit between the telegraph and telephone terminals is not more than 8 db. If the total net loss between telegraph terminals exceeds 15 db, operation at the higher sending level (0 dbm) may be necessary. The gain of the receiving equipment is variable and is designed to accommodate input levels from +5 to —25 dbm.

c. POWER SUPPLY. Telegraph Terminal CF–2–B (Carrier) is operated entirely by alternating current (ac) and is equipped with two rectifiers operating on a power supply from an external source of 50 to 60 cycles, 115 volts or 230 volts (±10 percent). The maximum power consumption of one telegraph terminal is about 275 watts. Operation should be limited to not more than two full-duplex circuits for each telegraph terminal because of the greater current drain when loop circuits are operated on a full-duplex basis.

5. Differences in Models

The only difference in models in the Telegraph Terminal CF–2–B (Carrier) is that on equipment with serial numbers 1 to 3,005, filters F9 and F10, for relays BK and REC respectively, and the connecting blocks for these relays are separate apparatus parts. In terminals with serial numbers above 3,005, filters F9 and F10 include the connecting blocks.

Section II. APPLICATION

6. System Application

Figure 10 is a simplified block schematic of a system comprising two Telegraph Terminals CF–2–B (Carrier) operating over a channel of a telephone carrier system using Telephone Terminal CF–1–(*) (Carrier).

D-C telegraph signals originating in the loop circuits at either end of the system modulate the voice-frequency carrier developed by the oscillator in the sending circuit for that telegraph channel. These modulated voice-frequency signals in turn modulate the carrier frequency of the Telephone Terminal CF–1–(*) (Carrier) circuit. This carrier frequency is then amplified by the carrier repeater shown at the midpoint of the circuit. At the receiving carrier telephone terminal, the carrier frequencies sent over the line are demodulated into voice-frequency signals. These voice-frequency signals are then demodulated by the receiving circuit of the telegraph terminal to d-c signals which are transmitted to the loop circuit.

7. System Lay-out

a. Telegraph Terminal CF–2–B (Carrier) is designed for operation on a channel of Telephone Terminal CF–1–(*) (Carrier). It will, however, operate satisfactorily over any two-wire or four-wire carrier telephone or voice-frequency circuit that satisfies the requirements for good telephone transmission. The output to all types of facilities is the same and is dependent on the loss between the telegraph term-

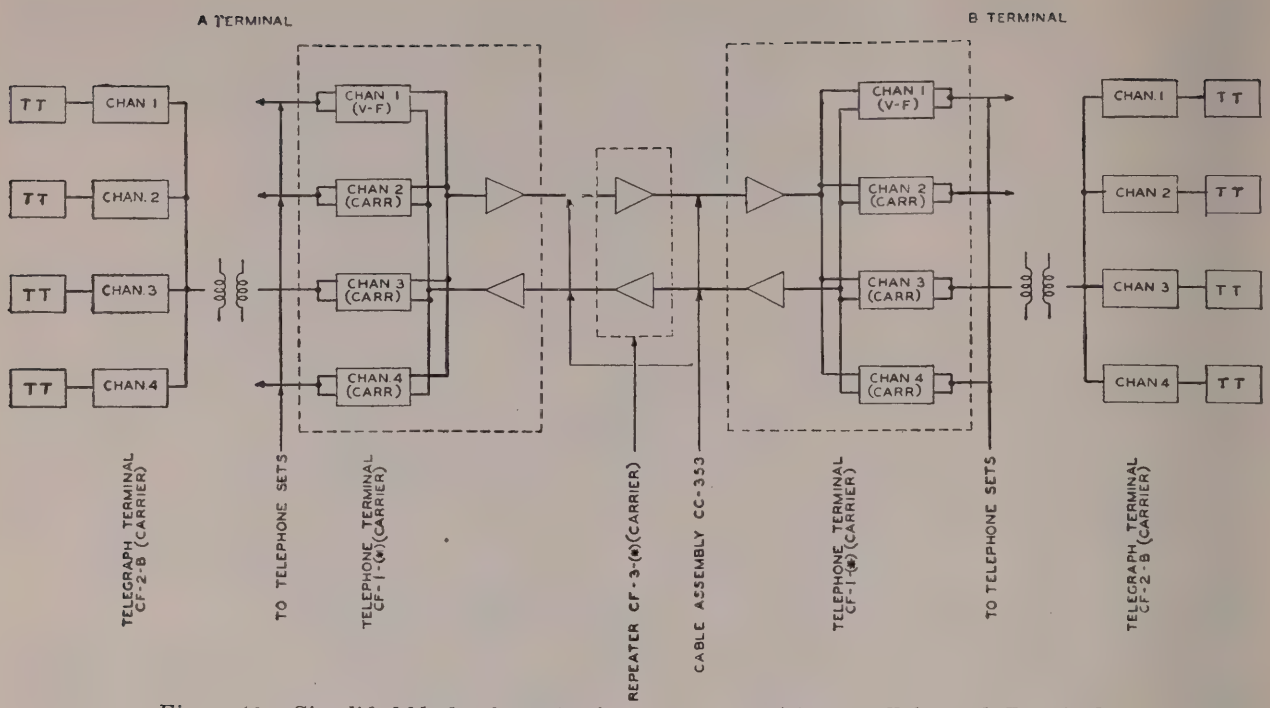

Figure 10. Simplified block schematic of a system comprising two Telegraph Terminals CF–2–B (Carrier).

TL53852

inal and the telephone facilities as discussed in paragraph 4*b*.

b. The loop circuit may be connected to teletypewriter equipment, to a d-c telegraph repeater, or to another carrier telegraph channel. The recommended maximum lengths for loop circuits are given in table III. In order to maintain a high-grade teletypewriter circuit do not connect more than three carrier telegraph channels in tandem. The carrier telegraph channels with associated equipment will provide transmission at 60 or 75 words per minute.

Section III. UNPACKING, SETTING-UP, AND REPACKING INSTRUCTIONS

8. Location of Equipment

Place the carrier equipment in a sheltered location to assure protection against rain, snow, etc. Whenever possible, place the cases on a dry, secure footing, such as dry boards, planks, etc. Locate the telegraph terminal as near as possible to the equipment with which it is to be associated allowing sufficient space in the front and rear of the line of bays to permit maintenance of the equipment. Keep interconnecting wires short and run overhead when possible. Remove front and rear covers of the cases.

Table III. Maximum lengths for loop circuits

Loop knob turned to—	Loop length
NEUTRAL TO NEG (or POS) BAT-HALF DX. NEUTRAL TO NEG (or POS) BAT-FULL DX.	16 miles (or special 20 miles*) of simplexed Wire W–110–B or Wire W–143 to line unit. (Terminating battery furnished at station.)
NEUTRAL TO NEG BAT-HALF DX. NEUTRAL TO NEG BAT-FULL DX.	12 miles (or special 16 miles*) of simplexed Wire W–110–B or Wire W–143 to Telegraph Switchboard BD–100. (Terminating battery furnished at switchboard.)
POLARENTIAL-HALF DX TWO PATH POLAR-FULL DX	25 miles of simplexed Wire W–110–B, or 40 miles of simplexed Wire W–143.

* Special line-up procedure. (See par. 17*a* (6)). The above mileage limits for Wire W–110–B are based on wet simplexed wire laid on the ground.

9. Unpacking Instructions

a. Telegraph Terminal Set TC–22–B is packed for export in three shipping containers.

Packing data for these containers are given below. Some variation from these figures should be expected because of differences in the weights and sizes of shipping cases. Shipping tons for items similar to this equipment are usually calculated on the basis of 1 shipping ton per 40 cubic feet.

Equipment	Quantity	Unit		Total	
		Weight (lb)	Volume (cu ft)	Weight (lb)	Volume (cu ft)
Telegraph Terminal CF–2–B	1	1,214	64.2	1,214	64.2
Chest BC–5, including terminals and wire	1	53	5.30	53	5.30
Ground Rod MX–148/G	2	30	1.13	30	1.13
Total for set	1			1,297	70.63

b. Before unpacking the containers, place them near to the operating location. Unpack the containers carefully. Avoid personal injury and damage to the equipment. Do not mutilate the packing materials. Store them in shipping containers for subsequent reuse. Cut metal straps and remove nails with a nail puller. Prying may result in damage to the equipment.

c. The methods of packing the various containers are shown in figures 11 through 13, and are briefly described in the following subparagraphs. With an understanding of the method of packing, each container may be opened safely and quickly.

(1) *Telegraph Terminal CF–2–B* (fig. 11). Each Telegraph Terminal CF–2–B is placed in a rigid metal barrier which is bolted together at each side. The metal barrier is packed in a solid wood container which is reinforced with metal straps.

(2) *Chest BC–5* (fig.12). The following miscellaneous parts are packed in a fiberboard box and shipped in Chest BC–5: Wire W–2 and Wire W–69–A are coiled, placed in separate cardboard boxes, and wrapped with waterproof paper; and two Clamps TM–106, placed in waterproof envelopes. The keys to the chest are placed in a waterproof envelope and taped to the inside of the chest. The chest lid is closed, fasteners secured, and the lock positioned in its keeper. A wooden frame is placed about the chest to protect it from damage in transit.

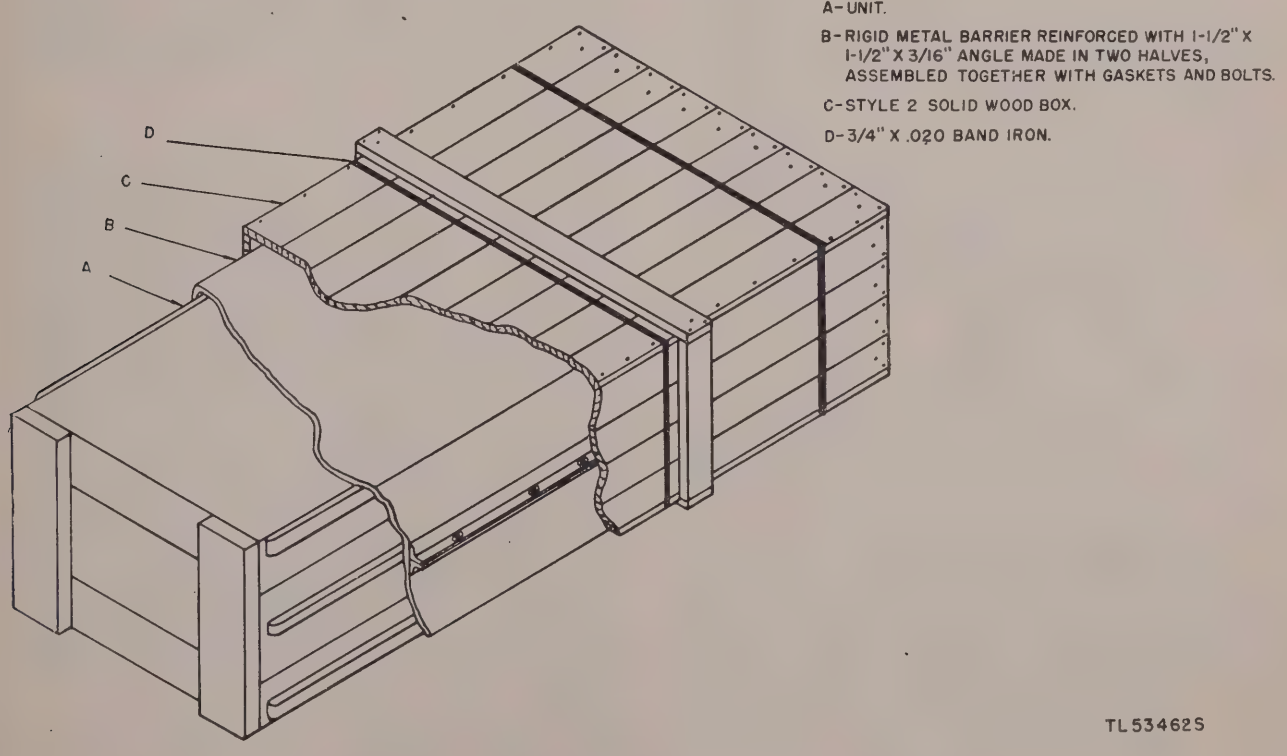

Figure 11. Telegraph Terminal CF–2–B, packing details.

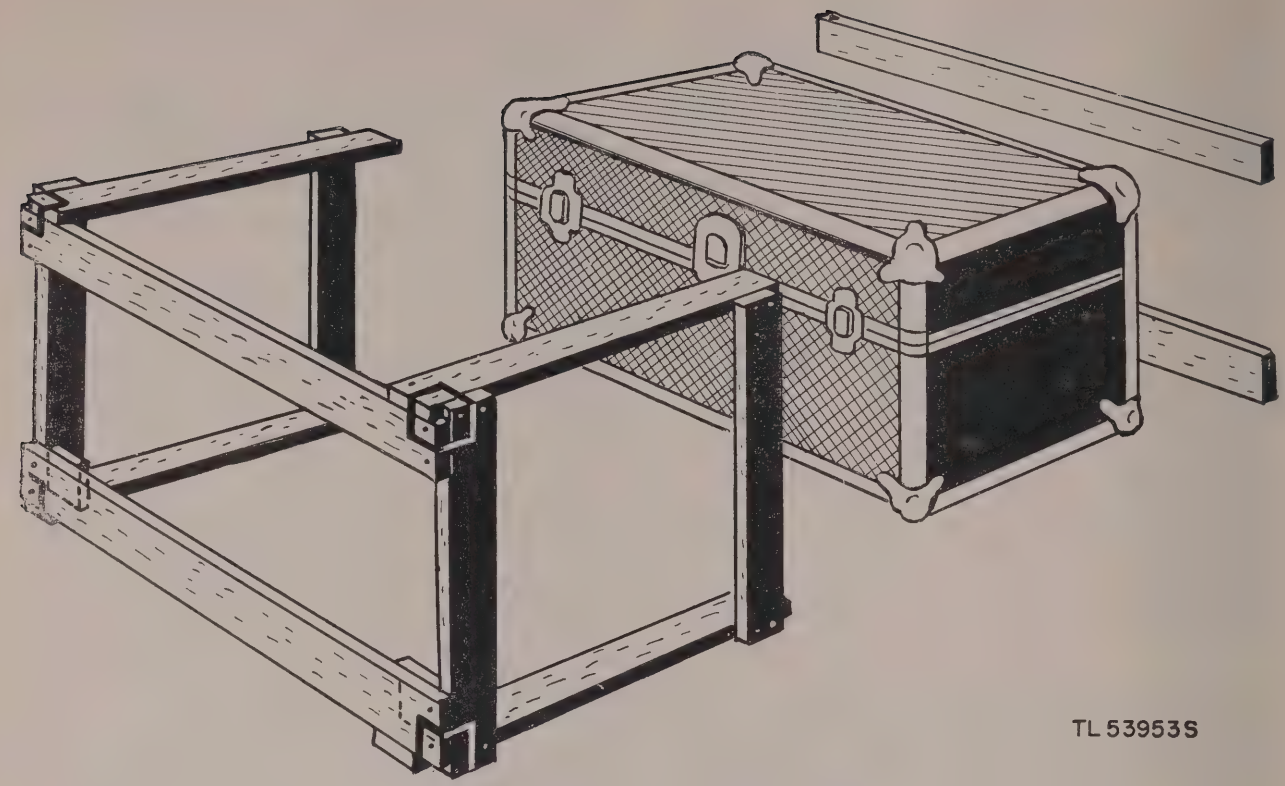

Figure 12. Chest BC–5, packing details.

(3) *Ground Rods MX–148/G* (fig. 13). The ground rods are placed first in an inner wooden container with braces to hold the rods rigidly. The outer wooden container is lined with a waterproof paper bag.

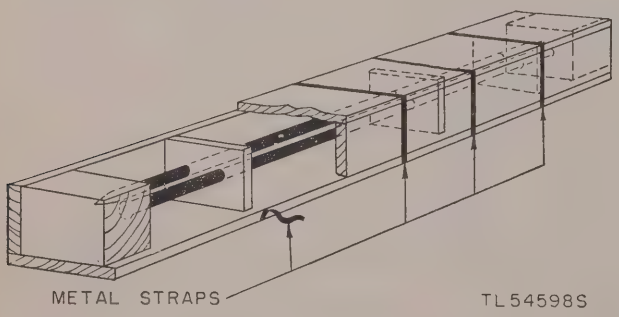

Figure 13. Ground Rods MX–148/G, packing details.

10. Assembly Instructions

Telegraph Terminal CF–2–B is shipped assembled. Vacuum tubes and necessary fuses are in their proper places. Spare vacuum tubes and fuses are mounted on the unit. The tubes are held in place with masking tape. Grasp the tube with one hand and remove the tape with the other. This method of handling eliminates the possibility of damaging the tube prongs or the sockets.

11. Repacking

If the equipment is to be repacked for troop movement or is to remain out of service for some time, take the following steps:

a. Disconnect the a-c connection and coil the cord through the retaining rings. Tie the cord in place. Disconnect all wiring to the binding posts of the filter and test panel.

b. Secure all spare parts in place.

c. Place instruction books in their holders.

d. Place front and rear covers in place and fasten the trunk draw bolts securely.

e. Place the cases in a dry location.

f. Inspect at reasonable intervals to see that the equipment is clean, free from rust, and has not been damaged. Clean and repair if necessary,

PART TWO
OPERATING INSTRUCTIONS

Note. For information on destroying this equipment to prevent enemy use see the destruction notice at the front of this manual

Section IV. EQUIPMENT CONNECTIONS AND INITIAL ADJUSTMENTS

12. Power-Supply Arrangements

a. GENERAL. The cabinet requires an external source of a-c power of 50 to 60 cycles, 115 or 230 volts (±10 percent). The connection to the a-c power supply is made with a power cord located at the lower right-hand corner of the bay. A ground connection is also required. This ground connection is made at a binding post in the first bay in a line-up and from there extended to a similar binding post in the other bays.

b. GROUNDING. (1) A ground is required at each telegraph terminal to minimize hazards to the equipment and to the personnel from lightning and other sources of high voltage, to reduce noise pick-up, and to supply the return path for loop circuits not arranged for metallic return. It is important that all equipment at any one location be connected to the same grounding system.

(2) A good connection to the pipes of a metallic underground cold water supply system at a point near the entrance to the building housing the equipment meets the requirement best for a low-resistance ground connection. Check to see that there is no insulating joint or meter so located as to prevent the water system from yielding a good ground.

(3) Use ground rods driven into permanently moist soil if necessary. Drive the ground rods with a separation of at least 10 feet between rods. If the ground rods are located in the basement of a building, place them at least 2 feet from any wall and drive them within 6 inches of the ground level. If the rods are located outside the building, place them at least 2 feet from the building. Connect the rods together using heavy copper wire.

(4) Use the No. 14 gauge wire furnished with the equipment for the main ground lead from the ground to the terminal. Terminate the incoming ground lead at the GRD binding post on the filter and test panel shown in figure 5.

c. POWER CONNECTIONS. Protection for the rectifier is provided by 3-ampere fuses AC 1 and AC 2, located within the rectifier. Remove the rectifier cover by loosening the four knurled cover screws and check to see that these fuses are in place. Replace the cover and tighten the cover screws. Check to see that the two power cords extending from the junction box located in the lower left-hand corner of the bay (facing the rear of the bay) are inserted in the power receptable located in the rear of each rectifier. Connect the power cord extending from the junction box located in the lower right-hand corner of the bay (facing the front of the bay) to the external source of a-c power.

13. Preliminary Adjustments

a. GENERAL. These instructions cover the procedures for setting up the equipment and the adjustments necessary to make all the channels operative. The instructions, in condensed form for performing these operations, are mounted on the equipment and are labeled Summary of Instructions. However, they cover only neutral half-duplex operation. Refer to the Technical Manual if operation is neutral full-duplex, polarential, or two-path polar.

(2) Words or abbreviations of words printed in SMALL CAPITALS correspond to markings appearing on the equipment. When the directions refer to lining up a particular channel terminal, the lettering and numbering on the bay indicate what equipment is included. The controls, tubes, and relays have identical markings on the four channels on a bay.

b. POWER RECTIFIERS. (1) On each carrier telegraph bay there are two rectifiers (stamped REG TUBE RECT). There must be a source of 115 volts or 230 volts (±10 percent), 50 to 60 cycles a-c power, terminating in an outlet

within 10 feet of the nearest bay. The power supply must be alternating current. Make the following tests on all rectifiers.

(2) Determine whether the input alternating current is 115 volts or 230 volts. Remove the rectifier covers by loosening the four knurled cover screws on the corners of each cover. Refer to the instruction plate below terminal strip AC shown in figure 14. This describes the connections for each input voltage condition. The connections place the primary coils of the transformer in parallel for a 115-volt supply and in series for a 230-volt supply.

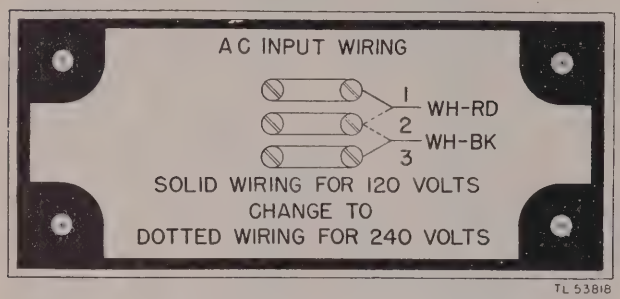

Figure 14. Instruction plate for terminal strip AC.

Change the connections if they do not correspond to the input voltage to be used. Tighten all screws on terminal strip AC with a screw driver whether connections are changed or not.

(3) Replace the cover and see that the thumbscrews holding the cover in place are turned down tight.

(4) Connect the power cord to the a-c supply.

(5) Insert the plug of the METER cord into the +TG jack on the loop control panel. (See fig. 6.) Wait until the timer operates (about 30 seconds), and then turn rheostat +TG on the rectifier with a screw driver as much as is needed to give a meter indication of 65. Turn the rheostat to the right (clockwise) to increase the voltage, and to the left (counterclockwise) to decrease the voltage. Repeat this procedure on the negative rectifier by inserting the plug of the METER cord into the −TG jack. Adjust the −TG rheostat in the same way. The meter, when arranged to measure the rectifier voltages, measures from 0 to 200 volts, or twice the meter scale markings. Therefore, a meter indication of 65 is equal to 130 volts.

(6) About 20 minutes after the initial adjustment, recheck the voltage. If the proper indication is not obtained, repeat the procedure given in (5) above.

14. Equipment Checks

a. POLAR RELAYS. There is a polar relay testing circuit on the bay. The power rectifiers on the bay must be operating when the relay test circuit is used. Following the polar relay test instructions located on the left side of the filter and test panel, test enough relays to equip all channels needed for immediate operation. Figure 15 shows the polar relay test instructions. As soon as service is established, test all remaining relays, including spares, to have properly adjusted relays on hand for prompt replacements and for additional channels if they are put into service. If any relay fails to meet the test requirements, refer to paragraph 61.

b. VACUUM TUBES. (1) Test all vacuum tubes VT–116 (6SJ7), including spares, once a month, using Tube Tester I–177 (Hickok Model 560) or Tube Tester I–171. A source of 100- to 125-volt, 50- to 60-cycle power is needed for the operation of the tester. The dial settings used in testing the tubes, and given on the roller chart included in the test set, are:

Signal Corps	Commercial	A	B	Fil	L	R
Tube VT–116	(6SJ7)	4	2	6.3	56	18

The tests to be made and the rejection limits are:

(a) Short-circuit test. Reject the tube if any short circuits are indicated.

(b) Transconductance test. Reject the tube if the meter reads REPLACE.

(c) Grid-current test. Reject the tube if the meter indication changes more than two scale divisions.

(2) A filament activity test of tube VT–116 also may be made if Tube Tester I–171 is available. There is no provision in Tube Tester I–177 for making this test. To make the test, use an L dial setting of 56 on Tube Tester I–171.

If the meter reads REPLACE with the FIL ACT key lever thrown, reject the tube.

c. CARRIER-CURRENT ADJUSTMENT. (1) The purpose of these adjustments is to select

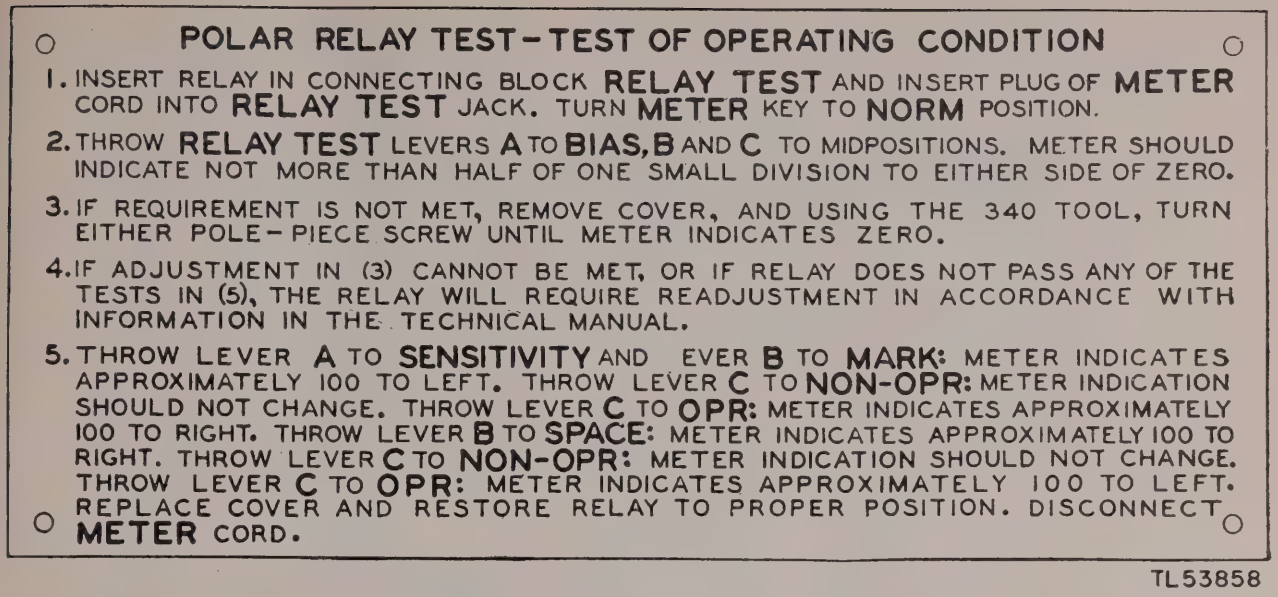

Figure 15. Polar relay test instructions.

the proper group of carrier frequencies and the amount of carrier current to be sent out.

(2) For four-channel operation, turn the SEND FILTER knob on the filter and test panel (fig. 5) and the SEND FREQ knob on the channel frequency oscillator panel (fig. 8) to A (HIGH) if at an A terminal (usually the terminal of higher command), or to B (LOW) if at a B terminal. The distant terminal must have the opposite setting of the SEND FREQ and SEND FILTER knobs. At each terminal, however, always operate the two knobs to the same position. (See fig. 16.)

(3) For eight-channel operation, if at an A terminal, turn the SEND FREQ and the SEND FILTER knobs of the bay containing channels 1 to 4 to A (HIGH), and the same knobs of the bay containing channels 5 to 8 to B (LOW). The two knobs (SEND FREQ and SEND FILTER) of each of the two bays in the distant terminal B must be set opposite to those for the corresponding bays in terminal A. (See fig. 16.)

(4) Turn the SEND LEVEL knob on the channel frequency oscillator panel (fig. 8) to LOW whenever the telegraph terminals are at the same location as their associated telephone terminals, or under any other conditions if the net loss between the telegraph terminals is not more than 15 db. Turn the SEND LEVEL knob to HIGH if the net loss between telegraph terminals is more than 15 db, or if the terminals are used with a noisy open-wire line. (See par. 42*c*.)

(5) Turn the SEND CARR knobs (fig.7) on all channels to MK (on both bays, if there are two bays arranged for eight-channel operation).

(6) Make sure that an adjusted polar relay is in each of the relay sockets, marked SEND, BK, and REC on all channels.

d. Carrier Receiver Test. (1) Test all channels in turn to make sure that the carrier receiver is in working order.

(2) Insert the plug of the METER cord into the RECEIVER CURRENT jack and turn the REC INPUT knob to TST. (See figs. 6 and 7.) *There must be an indication of at least 30 on the meter for the channel under test.*

(3) If the requirement is met, turn the REC INPUT knob to MK. (See fig. 7.)

(4) If a meter indication of 30 is not given, replace tubes V4, V3, V1, and V2 (fig. 7) as required, in that order. Check the meter indication after each tube is changed. If the requirement is still not met, make the following test.

e. Oscillator Adjustment. (1) Make this adjustment only if the requirement of the carrier receiver test (*d* above) is not met.

(2) Readjust the voltage on both power rectifiers to give a meter indication of 65 (130 volts). Do this by inserting the plug of the METER cord into the +TG jack of the positive rectifier. After waiting 30 seconds, turn rheo-

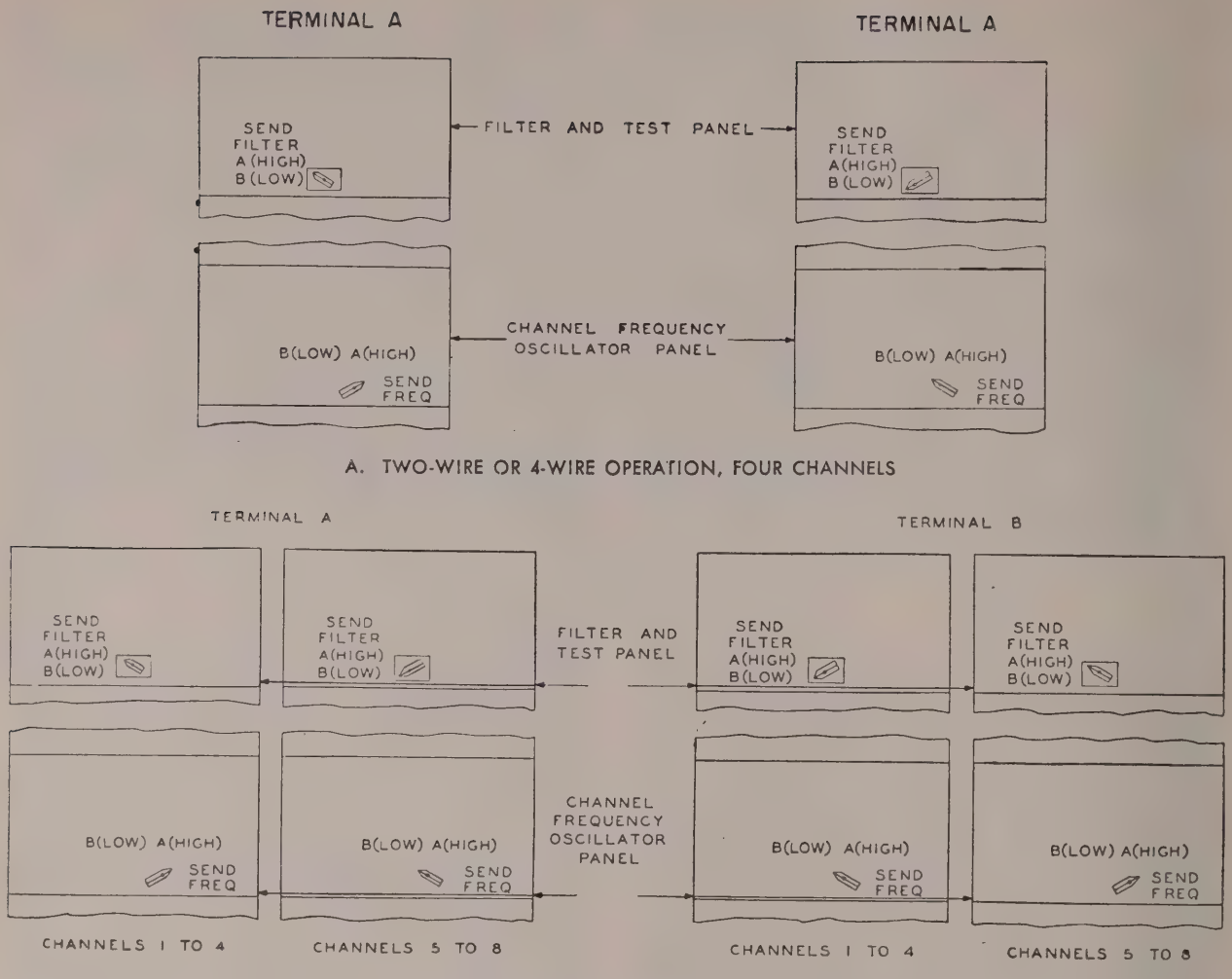

Figure 16. Positions of SEND FILTER and SEND FREQ knobs.

stat +TG with a screw driver to give the meter an indication of 65. Make the same adjustment on the negative rectifier. (See par. 13*b* (5).)

(3) Turn the knob marked METER on the filter and test panel (fig. 5) to OSC TEST.

(4) Turn the SEND LEVEL knob on the channel frequency oscillator panel to LOW. Insert the plug of the METER cord into the OSC OUT jack and check the meter indication. (See fig. 8.) A meter indication of 70±15 must be obtained.

(5) If a meter indication of 70±15 is not obtained, replace tube V5 (fig. 8) of the oscillator under test with another VT–116 (6SJ7) tube. If the desired indication is still not shown on the meter, see paragraph 62.

(6) Restore the SEND LEVEL knob to the position it was in before this test was begun. Disconnect the METER cord and restore the METER knob to the NORM position.

15. Connections to Line and Other Equipment

a. GENERAL. The external connections to be made are line and ground connections and loop circuit connections. The external connections are made to binding posts located on the filter and test panel and are explained in *b* and *c* below.

b. LINE AND GROUND CONNECTIONS. (1) Make the line and ground connections on the 10 binding posts located on the left side of the top panel of the bay. The connections made must depend upon the type of operation to be used, which may be two-wire four channels

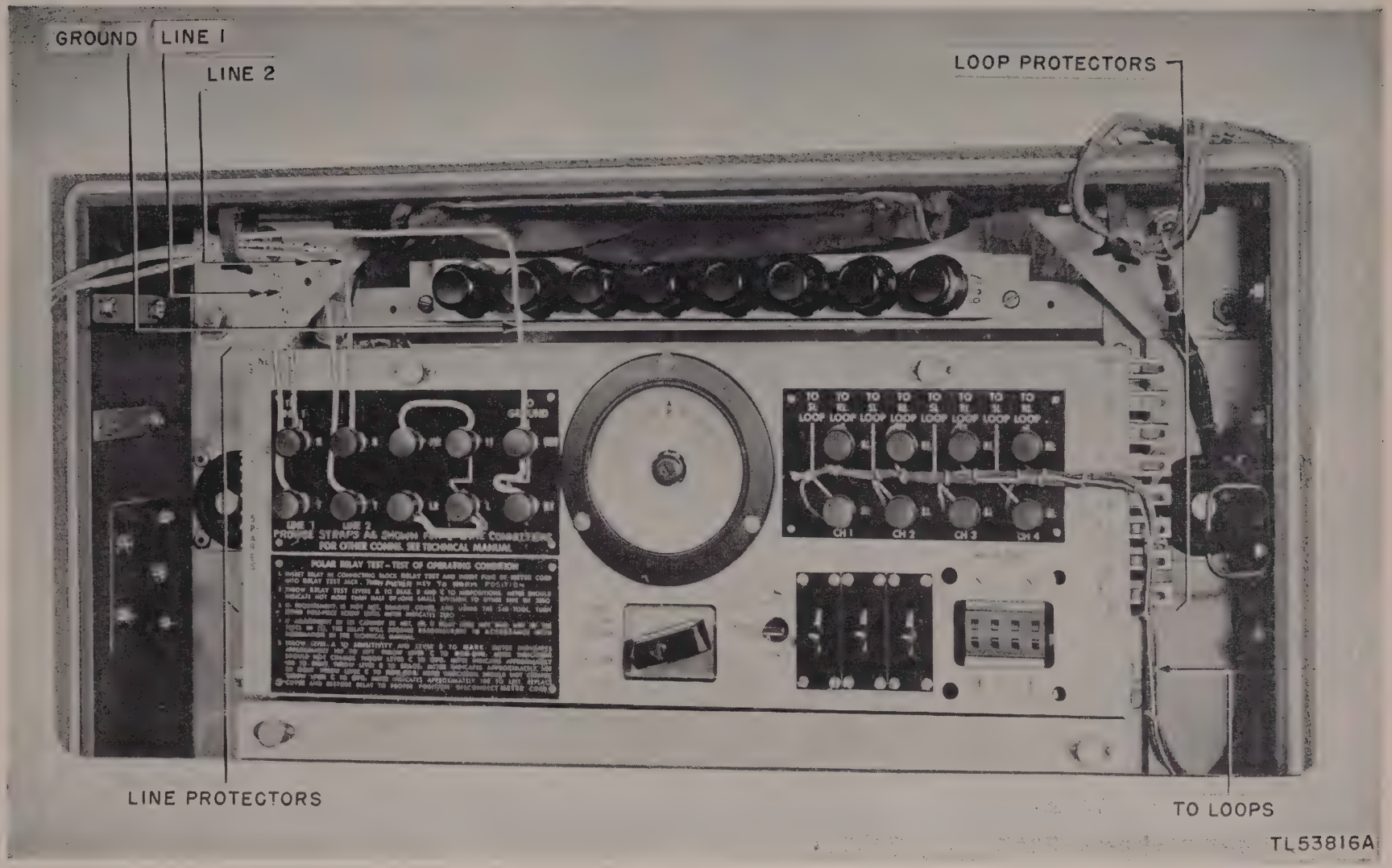

Figure 17. Filter and test panel, four-wire connection, channels 1 to 4.

(one bay), four-wire four channels (one bay), or four-wire eight channels (two bays). (See figs. 5, 17, and 18.) The usual connections will be for two-wire operation. (See fig. 5.) For convenience, these connections are shown by lines placed on the panel. Connections for four-wire operation are shown in figures 17 and 18.

(2) Connect a No. 14 gauge copper wire from the GRD binding post of each telegraph bay to the common grounding system. (See par. 12*b*.)

(3) Connect the GRD and BT binding posts by a short piece of wire (except the bay for channels 5 to 8 when two bays are used). Connecting by a short piece of wire is called strapping.

(4) For two-wire operation (figs. 5 and A, 19), connect the ground wire to the GRD binding post. Connect the line conductors to the LINE 1 binding posts T and R. Strap the binding posts LR and L, and the binding posts L and H.

(5) For four-wire, four-channel operation (figs. 17 and B, 19), connect the ground wire to the GRD binding post. Connect the conductors of the sending pair of the four-wire line to the LINE 2 binding posts T and R at an A terminal, or to the LINE 1 binding posts T and R at a B terminal. Connect the conductors of the receiving pair to the other binding posts T and R (LINE 1 or LINE 2). Strap binding posts H to HR and L to LR.

(6) Follow the same procedure for four-wire, eight-channel operation. (See figs. 18 and C, 19.) Connect the ground wire to the GRD binding post. Connect the conductors of the sending pair of the four-wire line to the LINE 2 binding posts T and R at an A terminal, or the LINE 1 binding posts T and R at a B terminal. Connect the conductors of the receiving pair to the other binding posts T and R (LINE 1 or LINE 2). Strap binding posts H to HR and L to LR. Then connect, by four separate wires of the right lengths, binding posts H, L, BT, and GRD to binding posts L, H, BT, and GRD, respectively, of the second bay. Make no other connections on the second bay.

c. Loop Circuit Connections. The teletypewriter stations which are to communicate with each other over a carrier telegraph line must be assigned to a carrier telegraph chan-

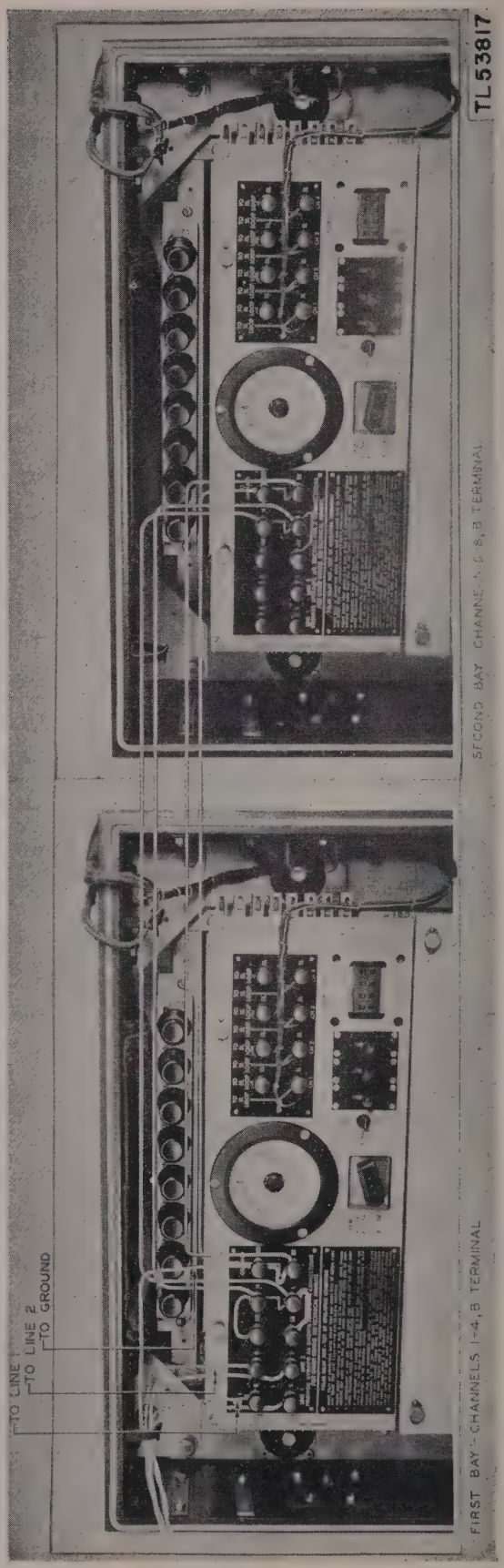

Figure 18. Filter and test panel, four-wire connection, eight channels, two bays.

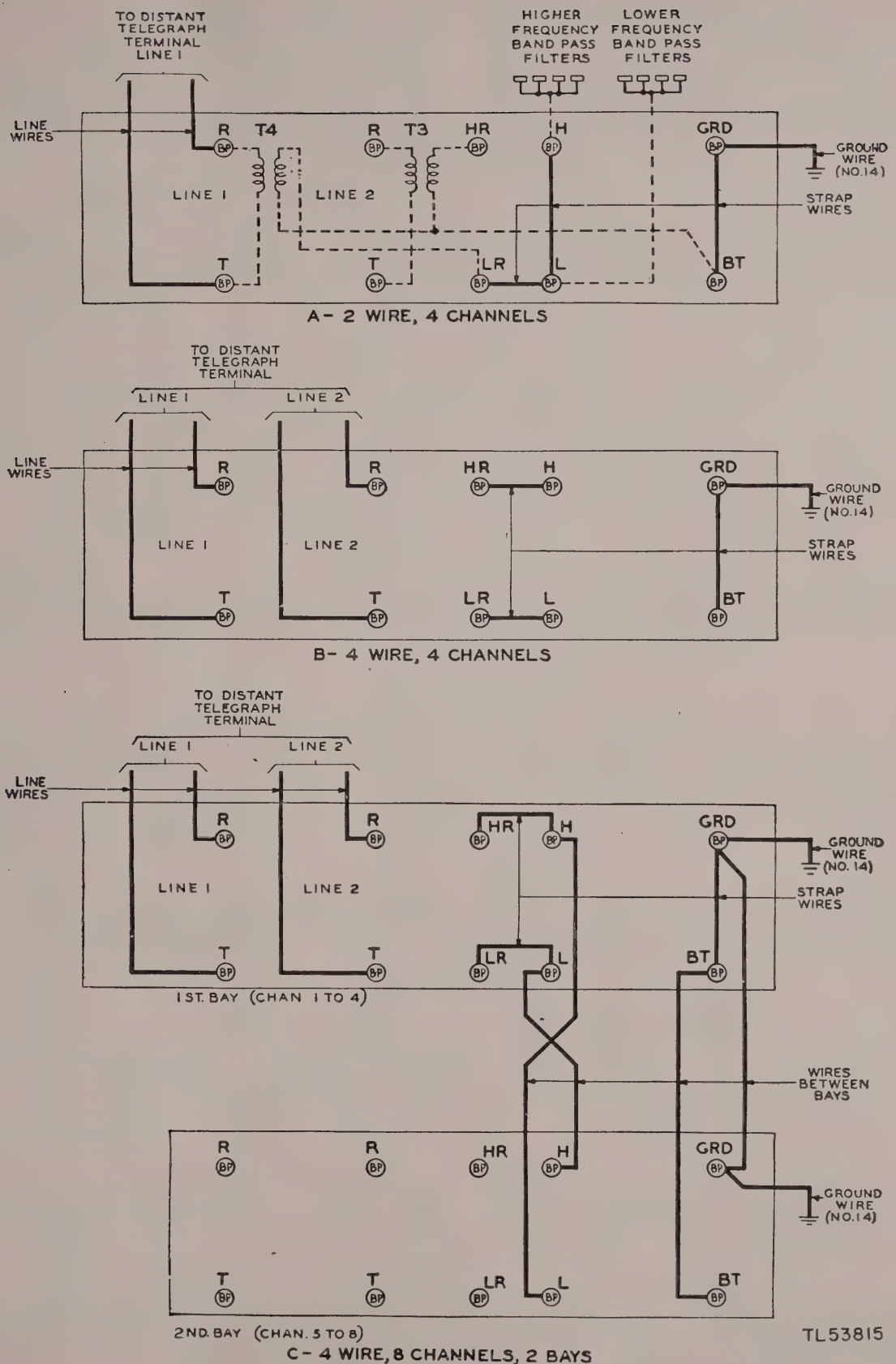

Figure 19. Diagram of binding post connections.

nel bearing the same number at each of the two Telegraph Terminals CF–2–B (Carrier) which are located at the ends of that line. This does not apply to stations connected on a through basis over two carrier telegraph systems in tandem, for which see paragraph 20.

If a connection is to be polarential or neutral half-duplex with terminating battery furnished at the station (A, C, or E, fig. 20), there is only one wire per channel terminal. Connect it to the binding post marked SL. If the terminating battery is furnished at the telegraph terminal

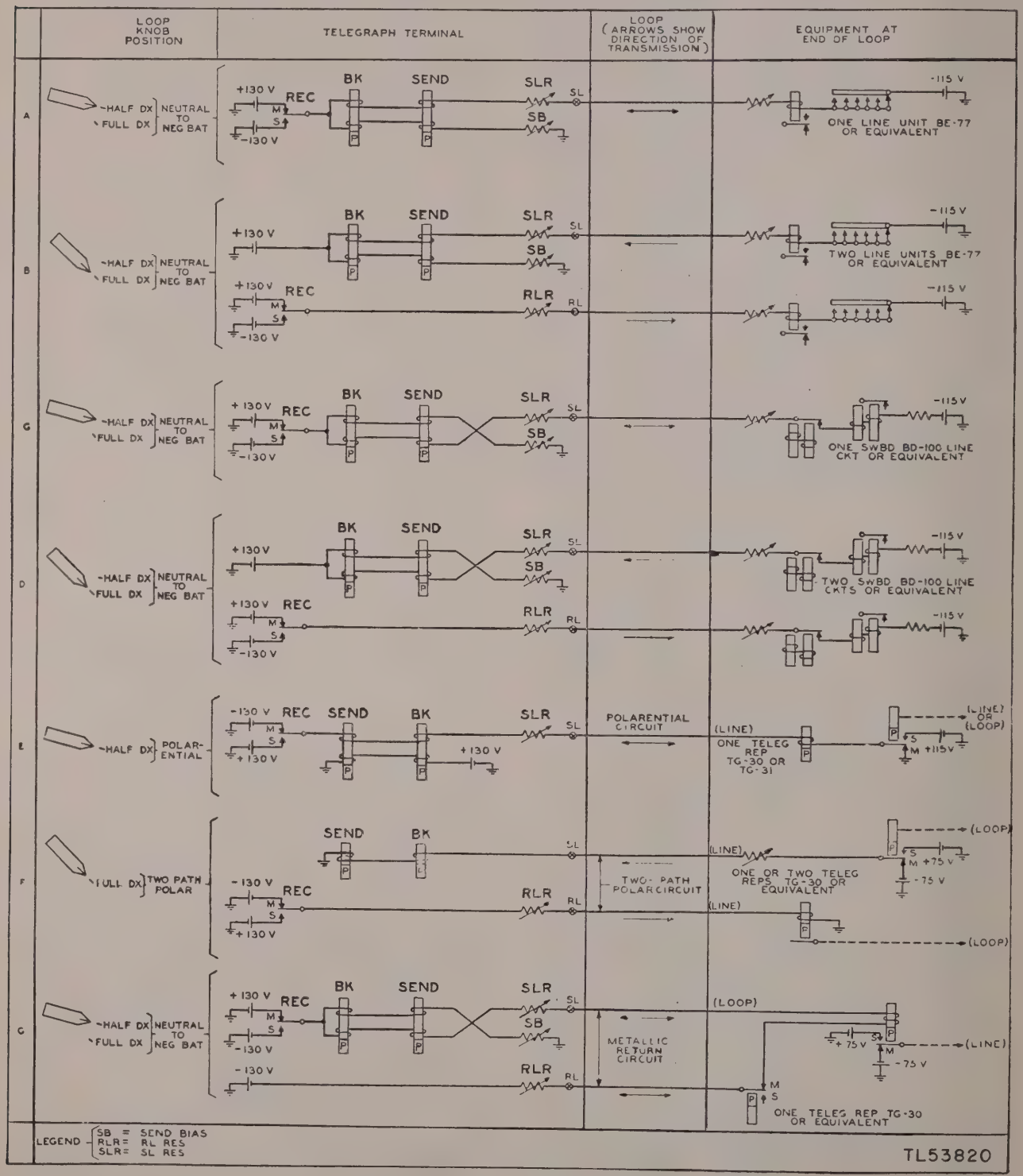

Figure 20. LOOP knob positions.

(G, fig. 20), there are two wires. Connect the loop (send wire) to the binding post marked SL. Connect the other wire (return wire for the battery) to binding post marked RL. If a connection is to be full-duplex (neutral or two-path polar, B, D, or F, fig. 20), there are two wires for each channel. One is the sending loop, the other is the receiving loop. Connect the sending loop to binding post marked SL and the receiving loop to binding post marked RL.

d. HALF-DUPLEX TANDEM CONNECTION WITH

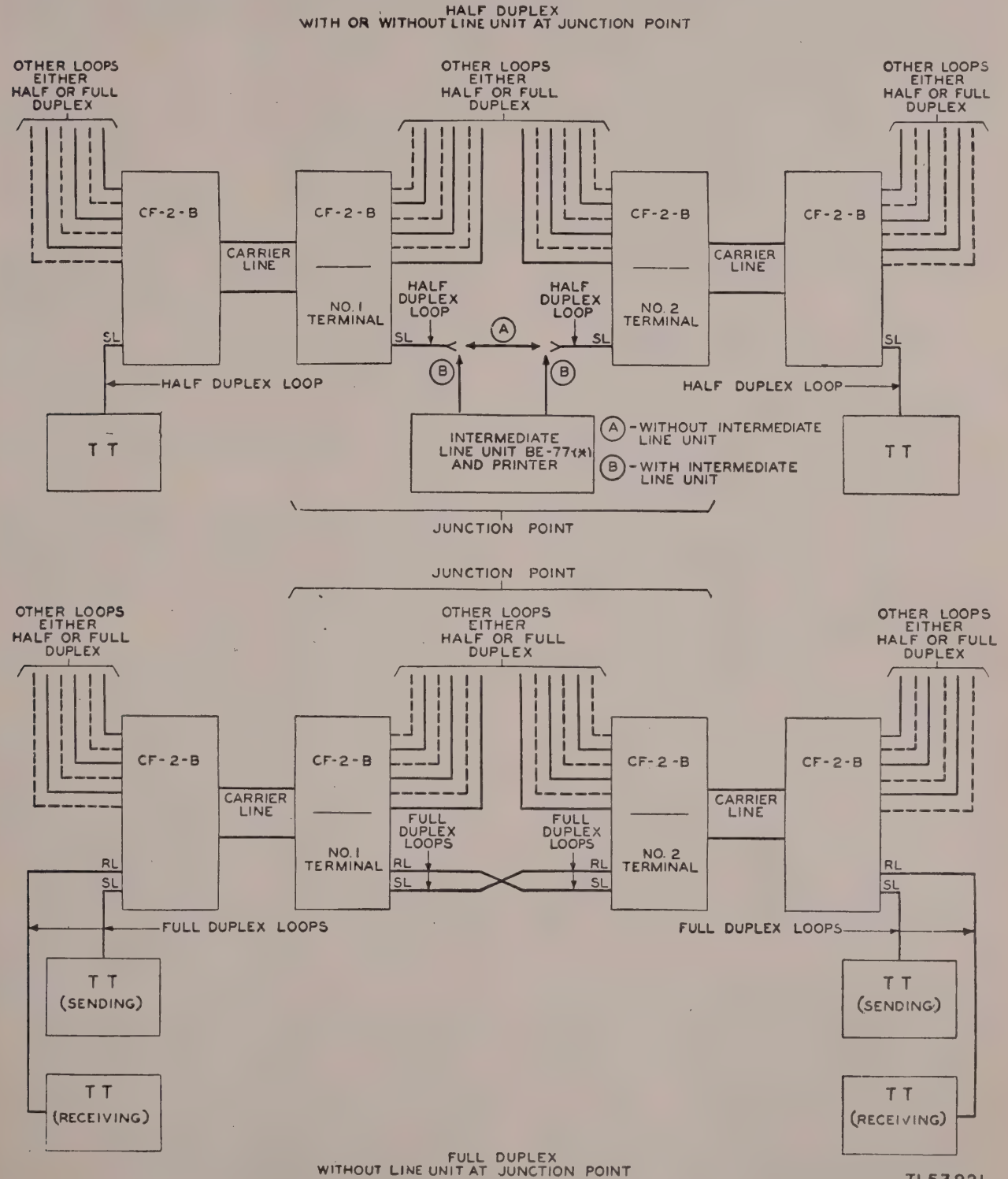

Figure 21. Tandem connections, schematic diagram.

TELETYPEWRITER STATION. When it is desired to connect a teletypewriter station at a half-duplex tandem connection (a half-duplex connection from one carrier telegraph channel to another), connect one of the wires from Line Unit BE–77–(*) associated with the teletypewriter station to the SL binding post of the selected channel of one carrier telegraph system and the other wire to the SL binding post of the selected channel of the other carrier telegraph system. Turn the LOOP switch on one channel to NEUTRAL TO POS BAT – HALF DX and on the other to NEUTRAL TO NEG BAT – HALF DX. Figure 21 shows a schematic diagram of a half-duplex tandem connection with a teletypewriter station as well as half- and full-duplex tandem connections without teletypewriter stations.

Section V. SYSTEM LINE-UP

16. System Line-Up

a. GENERAL. The system line-up provides procedures for lining up the loop circuits, for lining up the carrier receiver over the telephone circuit, and for lining up tandem connections. If the operator at the distant terminal has finished making the preliminary adjustments and the equipment checks outlined in paragraphs 13 and 14, respectively, make the receiver gain adjustment according to *b* below, on each channel in turn, then line up the loop circuits as instructed in *c* below. If the distant terminal is not ready, proceed with the loop line-up. The line-up procedures require communication with the distant telegraph terminal and with the stations. If a way other than the use of the telegraph equipment being lined up is available, use this other means to communicate with the distant telegraph terminal and the station. If no other means of communication is available, use a teletypewriter for this purpose. (See (1) and (2) below.)

(1) *Communication with distant telegraph terminal, using teletypewriter.* (*a*) If the receiver gain adjustment has not been made on the channel to be used for communicating with the distant telegraph terminal, make this adjustment. (See *b* below.)

(*b*) Insert the red plug attached to one of the teletypewriter cords into the PRINTER REC-RED jack, and the black plug of the other cord into the PRINTER SEND-BK jack. These jacks are located on the fuse panel. (See fig. 9.) Be careful to make connection to the pair of jacks associated with the particular channel to be used for communication.

(*c*) Turn the SEND CARR knob to NORM. (See fig. 8.) Throw the PRINTER lever (fig. 6) to SEND CARR and operate the teletypewriter in the usual way.

(*d*) When you have finished communicating, remove the cords from the jacks, turn the SEND CARR knob to its former position, and restore the PRINTER lever to its midposition.

(2) *Communication with station, using teletypewriter.* (*a*) Insert the red plug attached to one of the teletypewriter cords into the PRINTER REC-RED jack, and the black plug of the other cord into the PRINTER SEND-BK jack of the channel under test.

(*b*) Turn the REC INPUT and SEND CARR knobs to their MK positions. (See figs. 7 and 8.)

(*c*) Throw PRINTER lever to SEND LOOP and operate the teletypewriter in the usual way. (See fig. 6.)

(*d*) When communication is finished, restore the REC INPUT and SEND CARR knobs to their former positions, restore the PRINTER lever to its midposition, and disconnect the teletypewriter cords.

b. RECEIVER GAIN ADJUSTMENT. (1) The REC INPUT knob (fig. 7) is set on any one of seven steps, 2 to 8 inclusive, as needed to compensate for different levels of incoming carrier current at the line coil of the telegraph terminal. The level of the incoming carrier current depends upon the sending level at the distant telegraph terminal, which may be LOW (—10 dbm) or HIGH (0 dbm), and on the net loss of the circuit between the two telegraph terminals. The maximum receiver gain (REC INPUT knob on step 8) would be used with a LOW sending level of —10 dbm and a circuit net loss of 15 db, or with a HIGH sending level of 0 dbm and a circuit net loss of 25 db. When Telegraph Terminals CF–2–B (Carrier) operate with and are adjacent to Telephone Terminals CF–1–(*) (Carrier), the sending level at the distant terminal is LOW (par. 14*c*) and the REC INPUT knob is set on step 6. This condition assumes a net loss of not more than 6 db in the circuit between terminals A and B.

The position of the REC INPUT knob in relation to the level of the incoming carrier is as follows:

Table IV. REC INPUT knob settings

Level of incoming carrier at line coil (dbm)	REC INPUT knob to step
+ 5	2
0	3
− 5	4
−10	5
−15	6
−20	7
−25	8

(2) Set the REC INPUT knob on the proper step and insert the plug of the METER cord into the RECEIVER CURRENT jack. (See fig. 6.) If the meter indicates less than 30 on all channels, the line is open or the distant telegraph terminal is not ready. If the meter indicates more than 30, check to be sure that the SEND LEVEL knob on the channel frequency oscillator panel has been adjusted to LOW or HIGH, according to conditions, at the distant telegraph terminal. The meter should then indicate between 50 and 70. If the meter indication is not between 50 and 70, replace tube V4 (fig. 7) with another 6SJ7 tube. The tube which failed to give an indication of 50 to 70 may be used in other tube positions. If necessary to replace tube V4, repeat the carrier receiver test. (See par. 14*d*.)

(3) Disconnect the METER cord. If loop has not been lined up, complete the receiver gain adjustment on all channels, and then proceed with the loop line-up on each channel in turn. If the loop line-up was made first, the channel is now ready for operation.

c. Loop Circuits. (1) *General.* Complete the loop circuit line-up, one channel at a time, in accordance with paragraphs 17, 18, 19, or 20, whichever applies. When a loop is not properly terminated, proceed as outlined in *d* below.

(2) *LOOP knob setting.* Turn the LOOP knob on the channel under test to the type of service required. The selection of the LOOP knob position depends on the equipment located at the end of the loop, and the polarity of the marking battery or rectifier at that point. In the absence of specific information, refer to figure 20 and set the knob in accordance with the following table:

Table V. LOOP knob positions

Item in fig. 20	Loop equipment	LOOP knob position
A	One Line Unit BE–77–(*).	NEUTRAL TO NEG BAT –HALF DX
B	Two Line Units BE–77–(*).	NEUTRAL TO NEG BAT –FULL DX
C	One Switchboard BD–100, line circuit.	NEUTRAL TO NEG BAT –HALF DX
D	Two Switchboards BD–100, line circuits.	NEUTRAL TO NEG BAT –FULL DX
E	Line side of one telegraph Repeater TG–30 (Terminal) (with LINE switch in position 2) or telegraph Repeater TG–31 (intermediate).	POLARENTIAL –HALF DX
F	Line side of two telegraph Repeaters TG–30 (Terminal) (with LINE switch of one repeater in position 2 and LINE switch of the other repeater in position 1).	TWO PATH POLAR –FULL DX
F	Line side of one telegraph Repeater TG–30 (Terminal) (with LINE switch in position 3).	TWO PATH POLAR –FULL DX
F	Two-path polar equipment (British).	TWO PATH POLAR –FULL DX
G	Loop side of telegraph Repeater TG-30 (Terminal) half-duplex metallic loop operation.[1]	NEUTRAL TO NEG BAT –HALF DX

[1] This last connection is used when telegraph Repeater TG–30 is at the same location as the carrier telegraph terminal to which it is connected.

d. Preliminary Loop Current Check. (1) All the channel controls for making the loop adjustments are in a vertical column for each channel. (See fig. 6.) *In lining up a loop, make sure to manipulate only the controls of the channel to which it is connected.* This is called the channel under test.

(2) Turn the REC INPUT and SEND CARR knobs of the channel under test to their

MK positions. (See figs. 7 and 8.) If the receiver gain adjustment has been made, note the position of the REC INPUT knob before turning it, so that it can be restored to its former position after the loop line-up is completed.

(3) Insert the plug of the METER cord into the SL CURRENT jack.

(*a*) If the meter indicates a substantial current (a very low indication may be due to leakage and should be disregarded), proceed with the step described in (4) below, if the LOOP knob is on a FULL DX position. If the LOOP knob is on a HALF DX position, follow the directions in (5) below.

(*b*) If the meter indicates practically no current, and the LOOP knob is on either of the two positions marked TWO PATH POLAR or POLARENTIAL, the loop is open. Test another channel, beginning again as in *a* above, to save time.

(*c*) If the meter indicates practically no current, and the LOOP knob is on any of the four positions marked NEUTRAL TO NEG (or POS) BAT, the loop may be either open or terminated by a battery or rectifier having the wrong polarity. To determine which, turn the LOOP knob to the opposite battery condition. For example, if it is NEUTRAL TO NEG BAT–HALF DX, turn it to NEUTRAL TO POS BAT–HALF DX. If a substantial current indication on the meter occurs, leave the LOOP knob in that position and proceed with the step described in (4) below, if the LOOP knob is on a FULL DX position. If the LOOP knob is on a HALF DX position, follow directions in (5) below. If, however, the meter still indicates approximately 0, the loop is open. Test another channel, beginning again as in *a* above, to save time.

(4) If the LOOP knob is on any of the FULL DX positions and there is a meter reading ((3) above), insert the plug of the METER cord into the RL CURRENT jack.

(*a*) If the meter indicates a substantial current, insert the plug of the METER cord into the SL CURRENT jack and proceed as in (5) below.

(*b*) If the meter indicates practically no current, the loop is open. Test another channel, thus saving time.

(5) Proceed with tests given in paragraphs 17, 18, or 19 depending upon the type of service required.

17. LOOP Knob on Any Neutral Position

a. Terminating Battery Furnished at Station or Switchboard, Half-Duplex or Full Duplex (A to D, fig. 20). (1) Insert the plug of the METER cord into the SL CURRENT jack and turn the SL RES knob until the meter indicates as near 60 as possible.

(2) Unless the loop terminates in the place where the telegraph terminal is located, get in touch with the operator at the end of the loop under test and get cooperation in adjusting the current. (For method of communication see par 16*a*.)

(3) Turn the SL RES knob of the channel under test to the left (maximum resistance) as far as it will go.

(4) Instruct the operator at the station or switchboard to turn the rheostat in the sending loop to the right (minimum resistance) until a meter indication of 60 is obtained. If a meter indication of 60 cannot be obtained with all the resistance at the station or switchboard out of the circuit, turn the SL RES knob at the carrier terminal to the left (minimum resistance) until the desired indication is obtained.

(5) Instruct the operator at the station or switchboard to hold down teletypewriter space bar.

(6) Insert the plug of the METER cord into the SEND BIAS jack and turn the SEND BIAS knob until the meter indicates 0, except under the following conditions: If operation is to Line Unit BE–77–(*), the loop length is greater than 16 miles but not more than 20 miles of simplexed Wire W–110–B. If high-leakage (wet) conditions exist, adjust the SEND BIAS knob until the meter indicates two scale divisions to the left of 0 (10 to left of 0). If the line is dry, adjust the SEND BIAS knob until the meter indicates 0. If the operation is to Switchboard BD–100, the loop length is greater than 12 miles but not more than 16 miles of simplexed Wire W–110–B. If high-leakage conditions exist, adjust the SEND BIAS knob until the meter indicates two scale divisions to the left of 0 (10 to left of 0). If the line is dry adjust the SEND BIAS knob until the meter indicates 0. Instruct the op-

erator at the station or switchboard to release the space bar.

(7) If the loop knob is on a full-duplex position, proceed with the operations in (8) through (11) below. If the loop knob is on a half-duplex position, proceed at once with the operations listed in (11) below.

(8) For full-duplex operation, instruct the operator at the station or switchboard to turn the rheostat in the receiving loop of the equipment to the right (minimum resistance) as far as it will go.

(9) Insert the plug of the METER cord into the RL CURRENT jack, and turn the RL RES knob on the channel under test to the left (counterclockwise) as far as it will go.

(10) If the meter indicates more than 60, tell the operator at the station or switchboard to complete the current adjustment by turning the rheostat in the station or switchboard equipment until the meter then indicates 60. If the meter at the terminal indicates less than 60, turn the RL RES knob on the channel under test until it indicates 60.

(11) Perform the following operations:

(*a*) Disconnect the METER cord.

(*b*) If a teletypewriter was used, restore PRINTER lever to midposition and disconnect the teletypewriter cords from the PRINTER jack.

(*c*) Turn the SEND CARR knob to NORM.

(*d*) Turn the REC INPUT switch to proper step. (See par. 16*b*.)

(*e*) If the receiver gain adjustment (par 16*b*) has not been made, complete the loop line-up on all channels and make the receiver gain adjustment on each channel in turn. If the receiver gain adjustment was made first, the channel is now ready for operation.

b. TERMINATING BATTERY FURNISHED FROM TELEGRAPH TERMINAL, HALF-DUPLEX (G, fig. 20.). (1) Turn the RL RES knob to the middle of its rotation range.

(2) Insert the plug of the METER cord into the SL CURRENT jack, and turn the SL RES knob until the meter indicates 60.

(3) Tell the operator at the station to hold down the teletypewriter space bar. If necessary, communicate with him, insert the red plug of one of the teletypewriter cords into the PRINTER REC-RED jack, and the black plug of the other cord into the PRINTER SEND-BK jack. Turn the REC INPUT and SEND CARR knobs to their MK positions, and throw the PRINTER lever to SEND LOOP. Operate the teletypewriter in the usual way.

(4) Insert the plug of the METER cord into the SEND BIAS jack and turn the SEND BIAS knob until the meter indicates 0.

(5) Have the space bar released.

(6) Perform the operations described in *a*(11) above.

18. LOOP Knob on POLARENTIAL-HALF DX (E, fig. 20)

a. Insert the plug of the METER cord into the SL CURRENT jack.

b. Turn the SL RES knob until the meter indicates 30. For this test, the distant station must be in a marking condition.

c. Perform the operations described in paragraph 17*a*(11).

19. LOOP Knob on TWO PATH POLAR-FULL DX (F, fig. 20)

a. Insert the plug of the METER cord into the SL CURRENT jack. The meter should indicate current to the right of 0 for a marking condition at the end of the loop. This means that there is a proper connection of the batteries at the station. The value of the current indication depends upon the length of the loop and the voltage of the terminating batteries. No current adjustment is needed at the telegraph terminal.

b. Insert the plug of the METER cord into the RL CURRENT jack, and turn the RL RES knob until the meter indicates as close to 30 as possible.

c. Perform the operations described in paragraph 17*a*(11).

20. TANDEM CONNECTIONS

a. GENERAL. (1) Connection over two or more carrier telegraph circuits in tandem may be established by interconnecting the d-c sides of Telegraph Terminals CF–2–B (Carrier) at the junction point or points. (See fig. 21.) This is called a through connection. Through connections may be either full-duplex or half-duplex. Half-duplex operation may or may not have Line Unit BE–77–(*) at the junction point. Figure 21 shows only one interconnec-

tion between terminals 1 and 2, but there may be as many of these as there are channels. The channel of terminal 1 does not have to have the same number as the channel of terminal 2 to which it is connected. The channels not interconnected in this way are available for service on a single-section basis and should be lined up according to instructions given in paragraphs 16 through 19.

(2) A channel of Telegraph Terminal CF–2–B (Carrier) in tandem may be connected with a channel of Telegraph Terminal CF–2–A (Carrier). For this arrangement, follow the instructions for Telegraph Terminal CF–2–A (Carrier) in lining up both terminals. The detailed instructions in *b* and *c* below apply to two Telegraph Terminals CF–2–B (Carrier) connected in tandem.

(3) At the junction point, designate the bay which terminates one of the carrier lines as terminal 1, and the bay which terminates the other carrier line as terminal 2. Keep to this designation throughout the following instructions.

(4) If service is to be full-duplex, proceed as in *b* below. If the connection is to be half-duplex, with or without Line Unit BE–77 at the junction point, proceed as in *c* below.

(5) Carry out the specified operations at the junction point on the channel of terminal 1 and on the channel of terminal 2 when these terminals are to be connected.

b. Full-Duplex Connections. (1) For the channels under test, connect the binding post SL of each terminal to the binding post RL of the other terminal.

(2) Turn the LOOP knob of terminal 1 to NEUTRAL TO POS BAT-FULL DX.

(3) Turn the LOOP knob of terminal 2 to NEUTRAL TO NEG BAT-FULL DX.

(4) On both terminals 1 and 2, turn knobs and test as follows:

(*a*) Turn the SEND CARR and REC INPUT knobs to MK.

(*b*) Turn the RL RES knob to the middle of its rotation range.

(*c*) Insert the plug of the METER cord into the SL CURRENT jack.

(*d*) Turn the SL RES knob until the meter reads 60.

(5) Connect a teletypewriter to the channel of terminal 1 under test by inserting the black plug of the teletypewriter cord into the PRINTER SEND-BK jack, and the red plug into the PRINTER REC-RED jack, and by throwing the PRINTER lever to SEND LOOP. Hold down the space bar.

(6) If no teletypewriter is available at the junction point, turn the SEND CARR knob to NORM and turn the REC INPUT switch to the proper step for each terminal. Make the receiver gain adjustment (par. 16*b*) if it has not already been made. Arrange to have repeated space signals sent from the distant terminal of the carrier line connected to terminal 1.

(7) Insert the plug of the METER cord of terminal 2 into the SEND BIAS jack, and turn the SEND BIAS knob until the meter indicates 0. Have the teletypewriter space bar released.

(8) Disconnect the METER cord. If a teletypewriter was used, disconnect the teletypewriter cords from the PRINTER SEND-BK and PRINTER REC-RED jacks and restore the PRINTER lever to its midposition.

(9) Repeat these steps ((5) through (8) above), substituting terminal 2 for terminal 1 in (6) above and terminal 1 for terminal 2 in (7) above.

(10) On both terminals 1 and 2, turn the SEND CARR knob to NORM and turn the REC INPUT switch to the proper step for each terminal. (See par. 16*b*.) Make the receiver gain adjustment (par. 16*b*), if it has not been made.

c. Half-Duplex Connections. (1) Proceed as follows for the channels of terminal 1 and terminal 2 which are to be connected to each other:

(*a*) If there is no Line Unit BE–77–(*) at the junction point, connect a wire between binding post SL on terminal 1 and binding post SL on terminal 2.

(*b*) If Line Unit BE–77–(*) is at the junction point, connect one of the two wires from the line unit to the binding post SL on terminal 1. Connect the other wire to the binding post SL on terminal 2. Turn the rheostat on the line unit as far to the right (minimum resistance) as possible.

(2) Turn the LOOP knob of terminal 1 to NEUTRAL TO POS BAT-HALF DX.

(3) Turn the LOOP knob of terminal 2 to NEUTRAL TO NEG BAT-HALF DX.

(4) On both terminals 1 and 2, turn the

SEND CARR and REC INPUT knobs to MK.

(5) On terminal 1, insert the plug of the METER cord into the SL CURRENT jack. Turn the SL RES knob of either one or both terminals 1 and 2 until the meter indicates 60.

(6) If there is a line unit at the junction point, proceed as follows:

(*a*) Tell the intermediate operator to hold down the space bar of the teletypewriter.

(*b*) On both terminals 1 and 2, insert the plug of the METER cord into the SEND BIAS jack, and turn the SEND BIAS knobs on the two terminals in succession until both meters indicate 0. Tell the intermediate operator to release the space bar.

(*c*) Disconnect the METER cords and turn the SEND CARR knob to NORM, turn the REC INPUT switch to the proper step for each terminal, and make the receiver gain adjustment (par. 16*b*), if it has not been made.

(7) If there is no line unit at the junction point, proceed as follows:

(*a*) Connect a teletypewriter to the channel of terminal 1 under test by inserting the black plug into the PRINTER SEND-BK jack and the red plug into the PRINTER REC-RED jack. Throw the PRINTER lever to SEND LOOP. Hold down the space bar of the teletypewriter.

(*b*) If no teletypewriter is available at the junction point, turn the SEND CARR knob to NORM, turn the REC INPUT switch to the proper step for each terminal, and make the receiver gain adjustment (par. 16*b*) at this time, if it has not been made. Arrange to have repeated space signals sent from the distant terminal of the carrier line connected to terminal 1.

(*c*) On terminal 2, insert the plug of the METER cord into the SEND BIAS jack, and turn the SEND BIAS knob on that terminal until the meter indicates 0. Tell the operator to release the teletypewriter space bar.

(*d*) Disconnect the METER cord. If a teletypewriter was used, disconnect its cord from the PRINTER SEND-BK and PRINTER REC-RED jacks and restore the PRINTER lever to its midposition.

(*e*) Repeat the steps in (*a*) to (*d*) above, using terminal 2 for terminal 1.

(*f*) On both terminals 1 and 2, turn the SEND CARR knob to NORM and turn the REC INPUT switch to the proper step for each terminal. (See par 16*b*.) Make the receiver gain adjustment (par. 16*b*) if it has not been made.

21. Interference Test

a. When transmission is unsatisfactory, and the teletypewriter operators at the ends of the loop complain of errors in the copy received, the trouble may be caused by interfering currents on the carrier line. If there is no such interference, no current should be received on a particular channel when the sending relay at the distant telegraph terminal is on its spacing contact. If there is interference, more or less current will be received under these conditions. The amount will depend upon the amount of the disturbance. This residual current may be observed by the method described in *b* to *g* below. The transmission of messages is interrupted during the procedure.

b. Insert the plug of the METER cord on the channel on which the interference is to be observed into the RECEIVER CURRENT jack.

c. Communicate with the distant telegraph terminal. (See par. 16*a*.) Use the channel which you intend to test for this purpose, as this will not interfere with the results and two channels will not be disabled at the same time.

d. Tell the operator at the distant telegraph terminal to turn the SEND CARR knob on the channel under test to SP for an interval of about 5 minutes. Wait about 2 minutes after a sudden decrease in the meter indication shows that the carrier current has been turned off. Watch the action of the meter for a few minutes. If these is much interference, the pointer may jump occasionally, or it may indicate a more or less steady current. If the indications are more than 30, the service is likely to be poor.

e. When the 5-minute interval has elapsed, the operator at the distant telegraph terminal will restore the SEND CARR knob to NORM. Instruct the operator to observe the interference current (*d* above) at the distant end of the circuit and report the result. Turn SEND CARR knob to SP.

f. Restore SEND CARR knob to NORM. Disconnect the monitoring teletypewriter cords (if used) at both ends of the circuit. If the channel is serviceable, restore it to traffic.

g. If too much interference is shown by this test, and the connection is to Telephone Terminal CF–1–(*) (Carrier), notify the operator at the telephone terminal of the interference. If connected to some other type of line, notify the wire chief in charge of maintenance of this line of the interference.

22. Loop Circuit Tests

a. GENERAL. (1) For satisfactory operation of loop circuits, check, (if necessary readjust loop current) and send bias on the channels in service. While testing is in progress, discontinue service and have the channel under test in the marking condition.

(2) For these tests, it may be necessary to establish communication with the distant end of the loop. Connect a teletypewriter to the channel circuit under test by inserting the red plug attached to one of the teletypewriter cords into the PRINTER REC-RED jack, and the black plug of the other cord into the PRINTER SEND-BK jack of the same channel. Throw PRINTER lever to SEND LOOP.

(3) Check the voltage of both rectifiers and adjust, if necessary. (See par. 13*b*.)

(4) Make a record of the position of the REC INPUT knob; turn this knob and the SEND CARR knob to their MK positions.

b. LOOP CURRENT. (1) Insert the plug of the METER cord into the SL CURRENT jack of the channel under test and note the indication on the meter. If the LOOP knob of the channel is set on any of the FULL DX positions, insert the plug of the METER cord into the RL CURRENT jack, and note the meter indication. The meter indications should correspond to the values as shown in table VI.

(2) If the meter indications do not agree with those given in table VI for the LOOP knob position being used, adjust for correct meter indication by turning the SL RES knob when the METER cord is connected to SL CURRENT jack, or by turning the RL RES knob when the METER cord is connected to RL CURRENT jack.

(3) When the loop knob is in the position marked TWO PATH POLAR-FULL DX, the meter indication obtained when the METER cord is connected to the SL CURRENT jack is not under control of the SL RES knob. The loop current is adjusted at the distant end of the loop according to instructions on the equipment. The meter indication obtained when the METER cord is connected to the RL CURRENT jack may differ from 30. If it does adjust it as close to 30 as possible by turning the RL RES knob.

c. SEND BIAS. Check, and if necessary, readjust the send bias on all channels operating with the LOOP knob in any position other than POLARENTIAL-HALF DX or TWO PATH POLAR-FULL DX. Do this as follows:

(1) For loops connected to a carrier telegraph system not having tandem connections, communicate with the operator at the end of the loop and tell him to hold the space bar of the teletypewriter down for about 1 minute.

(2) Insert the plug of the METER cord into the SEND BIAS jack of the channel under test.

(3) Turn the SEND BIAS knob until the average indication of the meter is 0, or two scale divisions (—10) to the left of 0, depending upon the length of the loop. (See par. 17*a*.)

(4) Disconnect the METER cord.

Table VI. Loop circuit current values

Position of LOOP knob	Meter indication with METER connected to	
	SL CURRENT jack	RL CURRENT jack
NEUTRAL TO POS BAT-HALF DX (No wire on binding post RL).	60*	----------
NEUTRAL TO POS BAT-HALF DX (wire on both binding posts RL and SL).	60	----------
NEUTRAL TO POS BAT-FULL DX.	60*	60*
NEUTRAL TO NEG BAT-HALF DX (no wire on binding post RL).	60*	----------
NEUTRAL TO NEG BAT-HALF DX (wires on both binding posts RL and SL).	60	----------
NEUTRAL TO NEG BAT-FULL DX.	60*	60*
POLARENTIAL-HALF DX	30	----------
TWO PATH POLAR-FULL DX ((3) below).	no check needed.	30

* It may not be possible to get the desired current in this way. If this is the case, communicate with the operator at the distant end of the loop and tell him to turn the rheostat in the loop being tested until his meter reads 60.

(5) For loops connected to a carrier telegraph system having tandem connections (fig. 21), refer to paragraph 20. Perform the operations in paragraph 20*b*(5) through (9) if the loop connection at the junction point is full-duplex. If the loop connection is half-duplex and there is a Line Unit BE–77–(*) at the junction point, perform the operations in paragraph 20*c*(6); if there is no Line Unit BE–77–(*) at the junction point, perform the operations in paragraph 20*c*(7).

d. Restoring to Normal. (1) If a teletypewriter was used, restore the PRINTER lever to its midposition and disconnect the teletypewriter cords from the PRINTER jacks.

(2) Turn the SEND CARR knob to its NORM position.

(3) Turn the REC INPUT switch to its former position.

23. Receiver Circuit Operation

a. Receiver Circuit Test. (1) The purpose of this test is to check the sensitivity of the receiver circuit. The sending circuit at the distant telegraph terminal must be in the marking condition. This circuit is stamped with the same channel number as the receiving circuit under test.

(2) Check to see that the REC INPUT knob is on the proper step. (See par. 16*b*.)

(3) Insert the plug of the METER cord into the RECEIVER CURRENT jack. The meter should indicate between 50 and 70.

(4) If the meter indication is not between 50 and 70, replace tube V4 with another 6SJ7 tube, and check to see that the meter indicates between 50 and 70.

b. Change in Setting of REC INPUT Knob. Where the terminal is operated over a line, the attenuation of which varies considerably from time to time, errors may occur in the received copy if the level of incoming carrier at the line coil differs too much from that on which the REC INPUT knob setting was based. (See par. 16*b*.) Adjust the REC INPUT knob one step lower, or sometimes one step higher to obtain improvement in service.

Section VI. SUMMARY OF PROCEDURE FOR PLACING EQUIPMENT IN SERVICE

24. Summary of Procedure for Placing Equipment in Service

a. Unpacking. Remove the equipment from the packing cases in a manner that will allow repacking at a later date. Save packing slip furnished with equipment as part of the office records.

Warning: Do not touch metal parts of binding posts or other uninsulated apparatus when power is connected. Before removing covers from power rectifiers make sure that power cord is disconnected.

b. Installation. (1) Place the telegraph terminal as near as possible to the telephone equipment to which it is to be connected.

(2) Connect the ground wire to the GRD binding post.

(3) Remove covers from the rectifiers, and check to see that the connections on terminal strip AC agree with the voltage of the a-c supply. Replace the covers, and connect the power cord to the a-c supply.

c. Preliminary Adjustments. (1) Turn METER knob to NORM. Insert plug of METER cord into —TG jack and turn —TG screw on rectifier until meter indicates 65. Insert plug of METER cord into +TG jack and turn screw +TG on rectifier until meter indicates 65. Disconnect METER cord. A meter indication of 65 is equal to 130 volts.

(2) Test all polar relays required for service.

(3) Turn SEND FREQ and SEND FILTER knobs to A (HIGH) if at A terminal or to B (LOW) if at B terminal.

(4) Turn SEND LEVEL knob to LOW.

(5) Connect all binding posts except SL and RL.

(6) Turn all SEND CARR knobs to MK.

(7) Carrier receiver test (all channels):

(*a*) Insert plug of METER cord into RECEIVER CURRENT jack.

(*b*) Turn REC INPUT knob to TEST. Meter should indicate 30 or more.

(*c*) Turn REC INPUT knob to MK. Disconnect METER cord.

Note: Before the telegraph terminal is ready for service, the adjustments (*d* and *e* below) must be made. The order of performance depends upon whether the

loops or distant telegraph terminal are ready. For communication with distant terminal and station or telegraph switchboard, follow the instructions in *f* below.

d. Loop Adjustments (Each Channel).

(1) Turn REC INPUT and SEND CARR knobs to MK.

(2) Turn LOOP knob to NEUTRAL TO POS (or NEG) BAT-HALF DX depending upon polarity of terminating battery. When terminating battery is furnished at station or telegraph switchboard, follow instructions in (3) and (5) below. When terminating battery is furnished from telegraph terminal, follow instructions in (4) and (5) below.

(3) When terminating battery is furnished at a station or telegraph switchboard, proceed as follows:

(*a*) Connect loop wire to SL binding post. Distant station or telegraph switchboard must be supplying battery.

(*b*) Insert plug of METER cord into SL CURRENT jack. If meter does not indicate, loop is open or improperly terminated. If meter indicates, turn SL RES knob until meter indicates as near to 60 as possible.

(*c*) Communicate with and have station or telegraph switchboard turn rheostat in sending loop to extreme clockwise position, then turn SL RES knob to extreme counterclockwise position. If meter indicates more than 60, have station or switchboard turn rheostat until a meter indication of 60 is obtained. If the meter indicates less than 60, turn the SL RES knob until the meter indicates 60.

(*d*) Have the station hold the teletypewriter space bar operated.

(*e*) Insert plug of METER cord into SEND BIAS jack, and turn SEND BIAS knob until meter indicates zero. Have space bar released.

(4) When terminating battery is furnished from the telegraph terminal, proceed as follows:

(*a*) Connect sending wire of loop to SL, and return wire to RL binding post.

(*b*) Turn RL RES knob to middle of rotation range.

(*c*) Insert plug of METER cord into SL CURRENT jack. If meter does not indicate, loop is open. If meter indicates, turn SL RES knob until meter indicates 60.

(*d*) Communicate with and have station hold teletypewriter space bar operated.

(*e*) Insert plug of METER cord into SEND BIAS jack and turn SEND BIAS knob until meter indicates zero. Have space bar released.

(5) Disconnect METER cord. Turn SEND CARR knob to NORM and REC INPUT knob to step 6.

e. Receiver Gain Settings (Each Channel). (1) Before proceeding with these adjustments, be sure that distant telegraph terminal has completed the preliminary adjustments. (See *c*(1) through (6) above.)

(2) Turn REC INPUT knob to step 6.

(3) Insert plug of METER cord into RECEIVER CURRENT jack. Meter should indicate between 50 and 70. If meter indicates less than 30, line is open or distant telegraph terminal is not ready.

(4) Disconnect METER cord.

f. Communication (Using Local Teletypewriter). (1) Connect Printer TG–7 to channel by inserting black plug into PRINTER SEND-BK jack and red plug into PRINTER REC-RED jack. To communicate with distant telegraph terminal, follow the instructions in (2) and (4) below. To communicate with station or telegraph switchboard, follow the instructions in (3) and (4) below.

(2) To communicate with distant terminal—

(*a*) Check to see that the receiver gain settings (*e* above) have been completed.

(*b*) Turn SEND CARR knob to NORM.

(*c*) Throw PRINTER lever to SEND CARR and operate teletypewriter.

(3) To communicate with station or telegraph switchboard—

(*a*) Turn REC INPUT and SEND CARR knobs to MK.

(*b*) Throw PRINTER lever to SEND LOOP and operate teletypewriter.

(4) When through communicating, turn REC INPUT knob to step 6 and SEND CARR knob to NORM. Throw PRINTER lever to midposition and disconnect teletypewriter cords from channel.

Section VII. ROUTINE CHECKS OF PERFORMANCE

25. Records

Keep a record showing the troubles found and when and how they were cleared. Such records

indicate which equipment and circuits should be given the most attention and are useful in locating conditions causing circuit failures. An example of a trouble record is shown in table VII.

Table VII. Trouble record

Date	Time	Reported by—	Report	Disposition	Date	Time	Cleared by—
21 Oct	1530	WJB	Channel 2: Poor transmission.	Readjusted SEND relay.	21 Oct	1600	JAM
23 Oct	1340	ACH	Channel 1: No transmission.	Incorrect bias, adjusted REC relay.	23 Oct	1400	PEK
25 Oct	2350	RMM	Channel 1: No transmission.	+TG fuse blown.	25 Oct	2355	JAM

26. Purpose and Use of Equipment Performance Check List

The equipment performance check list helps the operator determine whether the various parts of the carrier terminal are functioning properly. The list gives the item to be checked, the condition under which the item is to be checked, the normal indications, and the corrective measures that the operator should take.

27. Equipment Performance Check List[1]

	Item No. *	Item	Action or condition	Normal indication	Corrective measure	Frequency of test
Rectifier voltage.	1	Plug of METER cord.	Insert in jack +TG or −TG.	+65 or −65.	Turn rheostat +TG or −TG.	Daily
Oscillator adjustment.	2	METER knob	Turn to OSC TEST			
	3	SEND LEVEL knob	Turn to LOW		Replace tube V5; if trouble is not cleared, refer to higher echelon for repair.	Monthly or whenever tube V5 is changed.
	4	Plug of METER cord.	Plug in OSC OUT jack.	70 ± 15		
Carrier receiver current adjustment.	5	REC INPUT knob	Check for proper setting.			
	6	Plug of METER cord.	Insert in RECEIVER CURRENT jack.	50 to 70	Replace tube V4	Weekly or whenever tube V1, V2, V3, or V4 is changed.
Loop circuit neutral half-dx.	7	Plug of METER cord.	Insert in SL CURRENT jack.	60	Adjust SL RES knob.	Weekly
Loop circuit polarential half-dx.	8	Plug of METER cord.	Insert in SL CURRENT jack.	30	Adjust SL RES knob.	Weekly
Loop circuit neutral full-dx.	9	Plug of METER cord.	Insert in SL CURRENT jack.	60	Adjust SL RES knob.	Weekly
	10	Plug of METER cord.	Insert in RL CURRENT jack.	60	Adjust RL RES knob.	
Loop circuit polar full-dx.	11	Plug of METER cord.	Insert in SL CURRENT jack.	30	Have operator at connected equipment adjust current.	Weekly
	12	Plug of METER cord.	Insert in RL CURRENT jack.	30	Adjust RL RES knob to have meter read as close to 30 as possible.	

[1] For all tests except the oscillator adjustment test the METER knob should be set at normal. All other controls, switches, etc., are to be left at normal positions unless instruction is given to set them in other positions.

* Adjustments for item 1 can be made at any time; adjustments for items 2 to 6 must be made when the channel can be removed from service. Adjustments for items 7 to 12 should be made when the circuit is not being used for communication. Climatic conditions might call for more or less frequent tests.

PART THREE

MAINTENANCE INSTRUCTIONS

Section VIII. PREVENTIVE MAINTENANCE TECHNIQUES

28. Meaning of Preventive Maintenance

Preventive maintenance is a systematic series of operations performed periodically on equipment in order to maintain top efficiency and performance, to minimize unwanted interruptions in service, and to eliminate major breakdowns. To appreciate the meaning of the term *preventive maintenance,* it is necessary to distinguish preventive maintenance from trouble shooting and repair. The primary function of preventive maintenance is to prevent breakdowns and the consequent necessity of repair. The primary function of trouble shooting and repair is to locate and correct existing defects. The importance of preventive maintenance cannot be overemphasized. The usefulness of the entire system of carrier communication depends upon the equipment being ready to operate at peak efficiency when needed.

Note: The operations in this section are first and second echelon (organization operators and repairmen) maintenance. Some operations in section XI are higher echelon maintenance.

29. Description of Preventive Maintenance Techniques

a. GENERAL. Most of the electrical parts used in this equipment require routine preventive maintenance. Those requiring maintenance differ in the amount and kind required. Because maintenance techniques cannot be applied indiscriminately, definite and specific instructions are needed. This section of the manual contains this type of specific instructions and serves as a guide for personnel assigned to perform the six basic maintenance operations, namely: Feel, Inspect, Tighten, Clean, Adjust, and Lubricate. Throughout this manual the lettering system for the six operations will be as follows:

F–Feel*
I–Inspect
T–Tighten
C–Clean
A–Adjust*
L–Lubricate*

The selection of operation is based on a general knowledge of field requirements. For example, dust filters into the equipment no matter how much care is taken to prevent it. Rapid changes in climatic conditions (such as heavy rains followed by blistering heat), or excessive dampness, tend to cause deterioration of exposed surfaces and parts.

b. INSPECT (I). Inspection is the most important of all of the preventive maintenance operations. If more than one man is available to do this work, choose the most observant, for careful observation is required to detect defects in the functioning of moving parts and any other abnormal conditions. To carry out the inspection operation most effectively make every effort to become thoroughly familiar with normal operating conditions and to be able to recognize and identify abnormal conditions readily. Inspection consists of carefully observing all parts in the equipment, noticing their color, placement, cleanliness, etc. Inspect for the following conditions:

(1) Overheating, as indicated by discoloration, blistering, or bulging of the part or surface of the container, leakage of insulating compounds, and oxidation of metal contact surfaces.

(2) Placement, by observing that all leads and cabling are in their original positions.

(3) Cleanliness, by carefully examining all recesses in the units for accumulated dust, excessive moisture, etc., especially between connecting terminals and contacts. Parts, connections, and joints should be free of dust, corrosion, and other foreign matter. In tropical and high-humidity locations, look for fungus growth and mildew.

(4) Tightness, by gently testing for movement of any connections or mountings which appear to be loose.

* The feel, adjust, and lubricate operations are inapplicable to Telegraph Terminal CF–2–B (Carrier).

c. TIGHTEN (T). Any movement of the equipment caused by transportation, concussion, or from the vibration of moving machinery may result in loose connections, which are likely to impair the operation of the equipment. The importance of firm mountings and connections cannot be overemphasized; however, never tighten screws, bolts, or nuts unless they are definitely loose. Fittings that are tightened beyond the pressure for which they are designed will be damaged or broken. When tightening, always be certain to use the correct tool of the proper size. If a screw does not turn easily, remove it and begin again.

d. CLEAN (C). (1) When the schedule calls for a cleaning operation, it does not mean that every item which bears that identifying letter must be cleaned each time it is inspected. Clean parts only when inspection shows that it is necessary.

(2) Items such as relay covers, vacuum tubes, capacitors, resistors, coils, etc., are cleaned by wiping with a clean, lint-free cloth or by brushing. It may be necessary in some cases to use cleaning fluid to remove dirt. Apply it with a cloth or brush, and wipe dry with a clean cloth. Remove corrosion by rubbing lightly with fine sandpaper.

Note: Gasoline will not be used as a cleaning fluid for any purpose. Solvent, dry cleaning, is available as a cleaning fluid through established supply channels. Oil, fuel, Diesel, may be used for cleaning purposes when dry-cleaning solvent (SD) is not on hand. Carbon tetrachloride will be used as a cleaning fluid only in the following cases: where inflammable solvents cannot be used because of the fire hazard, and for cleaning electrical contacts including relay contacts, plugs, commutators, etc.

30. Preventive Maintenance on Classes of Parts

This section does not deal with each tube, each resistor, or each capacitor of the equipment. Rather, it combines all the instructional material on the major classes of parts and devices. If abnormalities cannot be corrected by following these instructions, refer to the appropriate repair instructions for corrective action.

a. VACUUM TUBES AND SOCKETS. Preventive maintenance on these items should be performed only when the tubes are removed for periodic check. Preventive maintenance for vacuum tubes includes inspection and cleaning. Preventive maintenance for tube sockets and mountings involves inspection, tightening, and cleaning. Each of these operations will be discussed in detail below.

Note: Care must be taken in working on tubes. Severe burns may result from contact with the envelopes of hot tubes.

(1) *Inspect (I).* (*a*) Examine glass tube envelopes, tube caps, and tube connector clips for accumulation of dirt and corrosion. Watch for tube caps which have broken away from the cement that attaches them to the glass envelopes, and for tube envelopes that have broken away from the tube base. When tubes have loose plate caps or envelopes, they should be replaced if possible. If suitable replacements are not available, do not attempt repair, but keep a record so that replacement will be made at the earliest possibility.

(*b*) Examine the spring clips that make contact with the plate caps for corrosion and for loss of tension with resulting looseness. Check the condition of the wires soldered to the spring clips. The wires must be free of frayed insulation and broken strands. Remove connector clips from loose grid or plate caps carefully, particularly if signs of corrosion exist. Never turn a clip if it is on a loose cap.

(*c*) The firmness of tubes in their sockets must be determined by inspection. Inspect tubes by pressing them down in the sockets and testing them in that position, and *not* by partly withdrawing the tubes and jiggling them from side to side. Movement of a tube tends to weaken the pins in the base and unnecessarily spread the contacts in the socket. Trouble will occur where it did not exist before. Inspect the sockets of the tubes at the time the tubes are removed for periodic check.

(*d*) Be careful when removing a tube from its socket. Never jar a warm tube. Always move the connection to the grid cap. Store tubes carefully after they have been removed from the sockets. Do not place them on elevated flat surfaces without proper precautions to prevent their rolling to the ground or floor. Do not place them on the floor where they might be kicked or stepped upon.

(*e*) Inspect tube prongs for dirt and corrosion.

(2) *Tighten (T).* Socket mountings must be tight at all times. Otherwise, during transit they will be loosened, and the tubes in them may become irreparably damaged. When

tightening bolts that hold the tube sockets to the panel, do not apply excessive pressure. Too much pressure will crack the insulating material. Tighten tube connector clips by pressing with the fingers. Do not flatten the clips, since flattened clips do not make adequate contact with the surface of the tube cap.

(3) *Clean (C).* Clean the tubes, but only if inspection shows cleaning to be necessary. These tubes do not require frequent cleansing. Remove dust and dirt from the envelopes with a cloth, and remove dirt and corrosion from the tube prongs with a piece of fine sandpaper. Clean the plate caps by wrapping a piece of fine sandpaper around the cap, and rubbing gently along the surface. Do not use excessive pressure. Do not grip the cap tightly.

b. CAPACITORS. (1) *Inspect (I).* (*a*) Inspect the terminals of the capacitors for corrosion. Inspect the mountings for loose mounting screws, studs, or brackets. The terminals of the capacitors should not be cracked or broken.

(*b*) Inspect the case of each capacitor thoroughly for bulges, discoloration, and dirt.

(2) *Tighten (T).* Tighten loose terminals and mountings.

(3) *Clean (C).* Clean the case of the capacitors, the insulating bushings, and any connections that are dirty or corroded.

c. RESISTORS. (1) *Inspect (I).* Inspect the coating of vitreous resistors for signs of cracks and chipping, especially at the ends. Examine the bodies of all types of resistors for blistering, discoloration, and other indications of overheating. Look for arc pits or craters. Inspect clips and metallic ends of ferrule type resistors for corrosion, dirt, dust, and looseness. Check the security of all mountings. Do not attempt to move resistors with pigtail connections because there is danger of breaking the connections at the point where they enter the body of the resistor. Such defects cannot be repaired.

(2) *Tighten (T).* Tighten resistor mountings whenever they are loose. If a resistor is allowed to remain loose, vibration may break the connection or damage the body.

(3) *Clean (C).* (*a*) Remove all dirt, dust, and corrosion.

(*b*) Resistors with discolored bodies cannot be cleaned. Discoloration is indicative of overloading at some time prior to the inspection and is probably due to circuit trouble which requires analysis.

d. POLAR RELAYS. Polar relays REC, SEND, and BK are provided at each channel terminal. Each relay is inclosed in a cover. The relays are designed to plug into the equipment, making it unnecessary to disconnect any wires to remove the relay from the panel. To remove the cover from the relay, turn the cover in a counterclockwise direction and pull forward.

(1) *Inspect (I).* Inspect contacts of the relay in a good light, using a flashlight and small inspection mirror, when necessary. If the contacts are black, burned, or have a sooty deposit, back off contact screws until the armature contact can be readily observed in the mirror. Examine the contact for pits and build-ups. Where the contact screws are backed off, the relay will require readjustment. (See par. 61.) If, on examination, the contacts do not appear black or burned, make a further check for contact build-ups by holding the armature lightly against one contact, and check to see that a 0.003-inch blade of the 74D gauge passes easily between the armature and the other contact. Repeat for the other contact gap. If the gauge does not pass between the armature and either of the contacts, back off the contact screws and examine the contacts for pits and build-ups. If the 0.003-inch blade passes through the gap easily, check for a too wide contact gap by holding the armature lightly against one contact. Check to see that the 0.005-inch (or thicker) gauge passes through the other contact easily. Repeat for the other contact gap. If a gap wider than 0.005 inch is found, back off the contact screws and examine the armature contact for pits. If, on any of the three inspections, pits or build-ups are found, the contacts require cleaning. This operation for polar relays is covered in TM 11–2513.

(2) *Clean (C).* (*a*) *Relay exterior.* Brush the exterior of the relay with a soft brush. If prongs are dirty, clean them with crocus cloth.

(*b*) *Relay contacts.*

1. Before removing covers of relays, see that all apparatus is free of dust, dirt, or other foreign matter which might fall into the relay contacts.

2. Remove loose dust or line from the relay and relay contacts with a soft-bristle brush.
3. Inspect the relay contacts thoroughly. If they are dirty, burned, pitted, or corroded, service them in accordance with the instructions below.
4. To clean contacts, insert a clean, flat blade in the burnishing tool (Tool, switchboard, contact burnisher, WECo 265C, Signal Corps stock No. 6R41065C). Keep the blade clean by frequent wiping with a lint-free cloth moistened with carbon tetrachloride. To burnish normally open contacts, press them together with the orange stick (or suitable substitute) or operate the relay manually to give a slight pressure against the blade of the burnisher. At the same time, move the blade back and forth two or three times or as often as necessary to brighten the contacts. But avoid excessive burnishing. When contacts have been burnished, readjustment is necessary.
5. If burnishing does not eliminate the contact trouble, use carbon tetrachloride to clean the contact surfaces more thoroughly. Dip the flat end of a clean toothpick into the carbon tetrachloride. Then, holding the contacts slightly separated, deposit the liquid on the contacts without rubbing. Use the flat end of another toothpick to deposit more carbon tetrachloride on the contact to flush away dirt loosened by the first application. Again do not rub. Be careful to keep the carbon tetrachloride from all insulating materials. When the contacts are thoroughly dry, burnish them to remove all deposit or residue. Always burnish the contacts after cleaning with carbon tetrachloride.
6. Contact points which are badly pitted or built up may be reconditioned as follows: Remove the build-ups with a fine-cut point file (or in emergencies crocus cloth). Burnish the pits with the ball-point burnisher blade furnished with the switchboard contact burnishing tool. If the pit is small, place the ball point of the burnisher in the pit and rotate the barrel of the tool between the thumb and finger, at the same time applying slight pressure. If the pit is large, move the ball point of the burnisher over the surface of the pit with a circular motion. After removing, build-ups and cleaning pits, again burnish the contacts with a flat blade of the contact burnisher. Always be careful to avoid excessive removal of the contact metal.

Caution. Never use highly abrasive material, such as sandpaper or emery cloth, to clean relay contacts. And do not use paper because tiny burrs on the contact surfaces may pull off fine pieces of paper and cause bad contact.

(3) *Tighten (T).* (*a*) To tighten the four locknuts which hold the mounting prongs to the base plate of the relay with a 3/8-inch wrench.

(*b*) When necessary, apply pliers at the crimp in the cover-locking plate to make the relay cover hold more firmly against the base plate.

Caution. To tighen any screws or nuts on the relay other than the four locknuts mentioned in (*a*) above, a complete adjustment of the relay should be made.

e. KEYS, JACKS, AND SWITCHES. (1) *Inspect (I).* Inspect the mechanical condition of each key, jack, or switch, and look for signs of dirt or corrosion on all exposed elements. Examine the elements visually.

(2) *Clean (C).* Clean the exterior surfaces of keys, jacks, and switches with a clean, dry cloth. Clean the contacts by drawing a burnished blade between two contacts held together gently with the fingers. If excessive dirt is present, flush the contacts by dipping a toothpick in carbon tetrachloride and applying it to the contacts, or by dipping the burnishing blade in carbon tetrachloride and then drawing it between the contacts. After the application of carbon tetrachloride, clean the burnishing blade with a piece of dry, lintfree cloth and burnish the contacts again.

f. FUSES. (1) *General.* Fuses are usually small strips of metal with a low melting point. These are inserted in series with an electrical circuit and operate when the amount of current exceeds a prescribed value. Being very rapid in action, fuses protect equipment against overload and damage. Whenever a fuse is blown, an attempt must be made to discover the reason for the failure and corrections must be made, if possible, before a new fuse is installed. The small nonrenewable glass-tube fuses are mounted on the fuse panel and inside each of the rectifiers; they are removed by unscrewing and withdrawing the caps which hold them in place. When removed from a panel, a fuse and its holding cap can be separated by pulling them apart. Fuses are marked individually as to current carrying capacity to match the right fuse to its circuit. Be careful to keep fuse ends clean and bright. If they are not clean and bright, arcing and burning occur and eventually make replacement of the complete holder necessary.

(2) *Inspect (I).* Inspect the fuse caps for evidence of burning, charring, and corrosion. Inspect fuse ends for dirt and corrosion.

(3) *Clean (C).* Clean all fuse ends with No. 0000 sandpaper and wipe with a clean, dry cloth. If necessary, use a fine file to remove deep pits in the fuse ends or contacts. If a file is used, finish this work with No. 0000 sandpaper to leave a smooth contact surface. As a final step, wipe the file surface with a clean, dry cloth.

g. TRANSFORMERS AND COILS. (1) *Inspect (I).* Inspect transformers and coils for general cleanliness and for tightness of connecting lugs or terminal mounting brackets and rivets. Dust, dirt, or moisture between terminals of high-voltage transformers or on coils located at high-potential points in the circuit may cause flash-overs.

(2) *Tighten (T).* Tighten loose mounting screws or connections.

(3) *Clean (C).* Clean the cases of the transformers and coils.

h. TERMINAL STRIPS. (1) *Inspect (I).* Inspect terminal strips for cracks, breaks, effects of flash-overs, and loose connections or loose mounting screws. Carefully examine terminal strips for general cleanliness.

(2) *Tighten (T).* Tighten all loose screws, lugs, and mounting boards. When tightening screws, be sure to select a screw driver of correct size, and do not exert too much pressure.

(3) *Clean (C).* Clean mounting strips and terminal boards with a soft brush. If dirt deposits are difficult to remove, use dry-cleaning solvent (SD) on a brush or a clean cloth to clean the strips. Then wipe dry with a clean, dry cloth.

i. METERS. (1) *General.* Meters are extremely delicate precision instruments and must be handled very carefully. They require very little maintenance and cannot be satisfactorily repaired at the equipment. Replace any damaged meter with a spare meter, if one is available, and return it to the depot for repair.

(2) *Inspect (I).* Inspect the leads and connections to the meter. Check for loose, dirty, and corroded connections. Look for cracked or broken cases or cover glasses. Because the movement of the meter is extremely delicate, its accuracy will be seriously affected if the case of glass is broken and dirt or moisture filters through.

(3) *Tighten (T).* Tighten the meter mounting screws securing the meter to the panel. Be especially careful during this operation to avoid damaging the meter case. Tighten the connections at the back of the meter. To tighten loose connections and avoid damage to the meter, hold firmly the hexagonal nuts beneath the connecting lug with a wrench or thin long-nose pliers. Tighten the outside nut.

(4) *Clean (C).* Clean meter case and glass with a clean, dry cloth. If dirt deposits are difficult to remove, dampen the cloth with dry-cleaning solvent (SD). If solvent is used, wipe the surface clean and dry with a clean, dry cloth. Remove corrosion from connections with No. 0000 sandpaper. Always wipe a sandpapered surface with a clean, dry cloth.

j. CONTROL KNOBS. (1) *General.* Control knobs located on the front panel of the various component panels require little maintenance. If a knob is not securely fastened to the shaft of the part which it controls, it may slip during operation resulting in damage to the equipment or inaccurate performance.

(2) *Inspect (I).* Inspect control knobs for cracks and chips. Examine for general cleanliness and looseness.

(3) *Tighten (T).* Tighten the setscrews se-

curing the knobs to their respective shafts. Make certain that the knob pointer indicates the correct position of the control before tightening. If a knob is found to be cracked so that it cannot be tightened, replace it.

(4) *Clean (C).* Use a clean, dry cloth to clean control knobs.

k. WIRING, CABLING, AND CORD. These items can be regarded as the life lines of the equipment. Their condition should be closely observed.

(1) *Inspect (I).* (*a*) Inspect insulation for cracking, deterioration, fraying, and cutting, especially at connections and supporting points. Check for improper placement, which causes strain, particularly at connections. Watch for kinks and improper supports.

(*b*) Inspect all connections for tightness. Observe the ground connections very closely. If any one of the grounded points is open, it may interfere with operation of the equipment, and no protection is afforded to the operating personnel.

Caution. If any loose ground connections are observed, they should be tightened immediately. If practical, remove the equipment from service and disconnect the power supply.

(2) *Tighten (T).* (*a*) Tighten loose cable clamps, wiring rings, and binding posts.

(*b*) Resolder all loose or improperly soldered connections.

(*c*) Cut off frayed strands of insulation. If wire is exposed, wrap it with friction tape.

(3) *Clean (C).* Clean prongs of cord plugs and connections when they are dirty or corroded. Scrub with a brush dipped in dry-cleaning solvent (SD) and dry thoroughly with a cloth. Remove corrosion by rubbing lightly with fine sandpaper.

l. CARRYING CASE AND PANELS. (1) *Inspect (I).* Inspect the carrying case and panels for scratches and dents, excessive dirt or dust conditions, fungus growth within the carrying case, and loose connections.

(2) *Tighten (T).* Tighten the mounting plate screws, knurled panel screws, hinges, carrying handles, and connection bolts. Replace missing parts.

(3) *Clean (C).* Clean carrying case inside and out.

m. RELAY R, INSPECT (I). A relay designated R is in each of the power rectifier panels

Table VIII. Preventive maintenance tools and materials

Mfr's. part No.	Signal Corps Stock No.	Name of tool or material	Use
KS–8740 List 2	6R24626	Soldering copper, electric with KS–8740 list 31B tip, 2⅜".	Repairing poor or loose connections.
P–294472	6N7531.2	Solder, rosin core, 0.070".	
R–2120	6R4748–6.5	Pliers, long-nose: 6".	
R–6433	6Q29928	PLIERS, diagonal: V notch, 5".	
KS–6854	6R40848/1	Screwdriver: 3½".	Tighten screws.
90	6R16021	Screwdriver: regular: 5".	
R–1021	6Z1550	Brush: flat, stiff, ½".	Removing dirt, dust and corrosion.
		Solvent: Dry cleaning (SD).	
	6Z7500–0000	Sandpaper, 150 grade, #0000.	
KS–2423	6N1624	Cloth: lint-free.	
RM–591127	6N8583	Tape: friction, ¾".	Repairing frayed insulation.
265C	6R41065C	Burnisher: relay contact.	Cleaning and inspecting contacts.
266B	6R41066C	Burnisher blade.	
RM–717053	6Z8666	Toothpicks.	
KS–7320	6Z7360	Orange stick.	
KS–6815	6G184	Carbon tetrachloride.	
74–D	6R40874D	Gauge: nest, thickness, 12 gauges.	
KS–2662	6Q37104	File.	
	6Z4002B	Flashlight TL–122B.	
340	6R41140	Adjuster: relay armature air gap.	
376A	6Z7072	Dental mirror.	
	6R55507	Wrench, socket: set, consisting of handle and 6 sockets.	Tightening nuts and bolts.

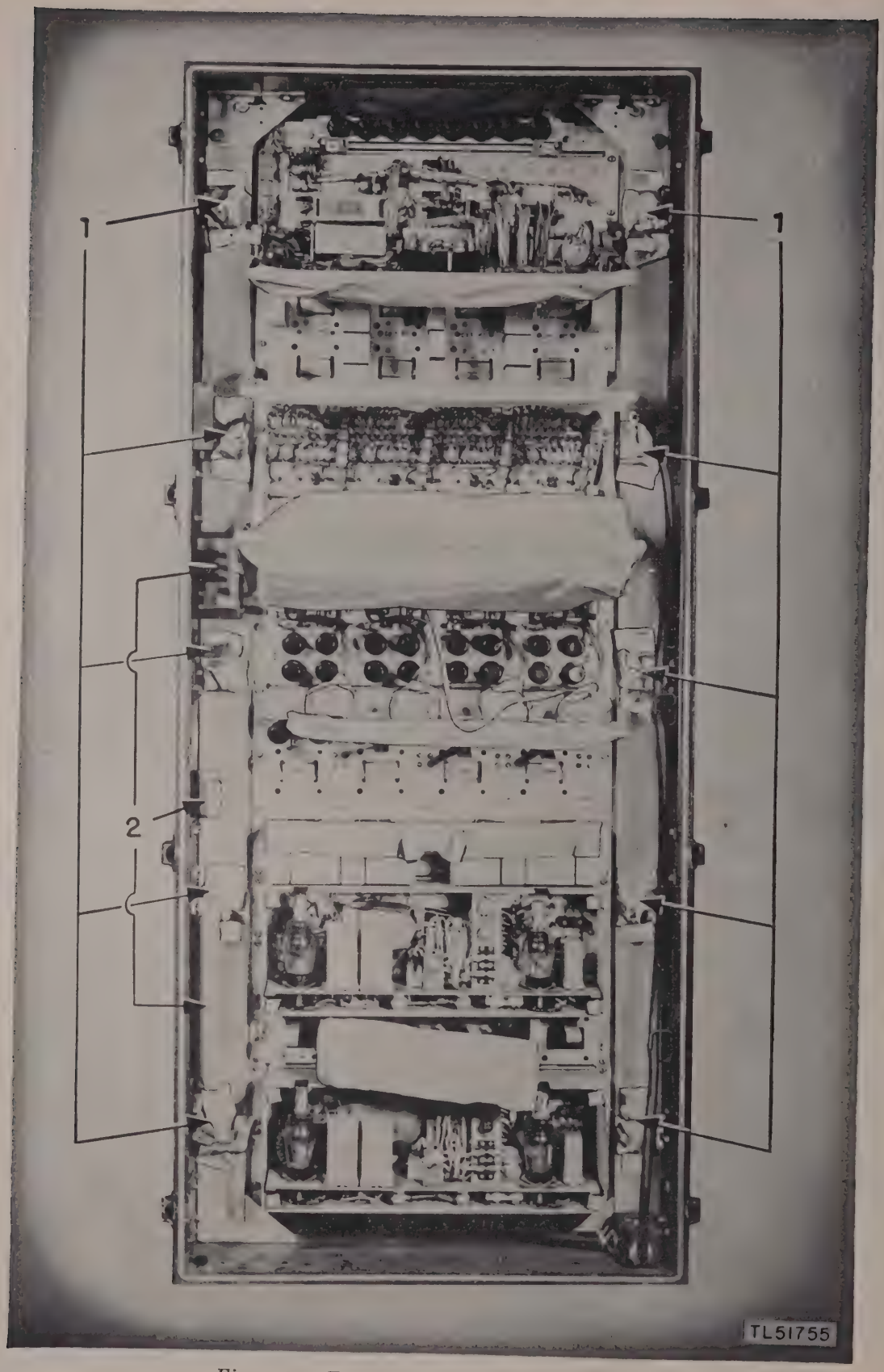

Figure 22. Front view of bay, masking details.

back and to the left of rectifier tube V2 and back of the a-c terminal strip. (See fig. 43.) Make a visual inspection only. Using a flashlight, and a small inspection mirror if necessary, check to see that the relay is operable. To do so, pull the a-c plug; the relay should release. If the relay fails to release under this condition, refer to paragraph 63*b*.

31. Preventive Maintenance Tools and Materials

Note. Before starting preventive maintenance, have on hand all tools and materials needed to perform operations listed in the preventive maintenance check list. The tools and materials listed in table VIII will be needed in performing preventive maintenance on this equipment.

Section IX. PREVENTIVE MAINTENANCE CHECK LIST

32. Preventive Maintenance Check List for Telegraph Terminal CF-2-B (Carrier)

Note. These items are second echelon maintenance.

Item No.	Operations	Item	Par. reference	When performed		
				Weekly	Monthly	Semi-annually
1	ITC [1]	Vacuum tubes and sockets	30*a*		X [1]	
2	ITC	Capacitors	30*b*			X
3	ITC	Resistors	30*c*			X
4	ITC [1]	Polar relays	30*d*		X [1]	
5	IC [1]	Keys, jacks, and switches	30*e*			X [1]
6	IC [1]	Fuses	30*f*			X [1]
7	ITC	Transformers and coils	30*g*			X
8	ITC	Terminal strips	30*h*			X
9	ITC	Meters	30*i*			X
10	ITC	Control knobs	30*j*		X	
11	ITC	Wiring, cabling, and cords	30*k*		X	
12	ITC	Carrying cases and panels	30*l*	X		
13	I	Relay R	30*m*			X

F Feel[2] I Inspect T Tighten C Clean A Adjust[2] L Lubricate[2]

[1] Perform these operations only when the equipment is removed from service.
[2] The Feel, adjust, and lubricate operations are inapplicable to Telegraph Terminal CF-2-B (Carrier).

Section X. LUBRICATION

33. Lubrication

Lubrication of this equipment is not required because there are no moving parts.

Section XI. MOISTUREPROOFING AND FUNGIPROOFING

34. General

a. When equipment is operated in highly humid climates, excessive failure of parts and decreased operating efficiency are usually caused by the accumulated effects of moisture, rather than by inferior parts. Rapid temperature changes accompanied by fog, rain, dew, or high humidity promote such failures.

b. The effects of moisture on resistors, capacitors, coils, chokes, transformer windings, terminal boards, and insulating strips can be recognized in the form of corrosion, low insulation resistance, flash-overs, and crosstalk. Moisture also accelerates fungus growth which increases these effects.

35. Reducing Failures

a. A moistureproofing and fungiproofing treatment has been devised which, if properly applied, provides a reasonable degree of protection. The treatment consists of applying a film of moisture- and fungi-resistant varnish to all susceptible parts of the equipment. This film provides a nonwetting surface. Equipments which have been treated have been

marked with the letters MFP and the date of treatment. Equipments not marked should be examined, and if treatment has not been applied, the equipment should be returned to third or higher echelon maintenance units for treatment.

b. TB SIG 13 contains a detailed description of this treatment.

c. Retreatment may be required after a period of use. Need for this retreatment is indicated by excessive failures or by the effects listed in paragraph 34*b*.

36. Treating Telegraph Terminal CF-2-B (Carrier)

a. PREPARATION. Make all repairs and adjustments necessary for proper operation of the equipment.

b. DISASSEMBLY. (1) Remove the front and rear covers of the carrying case. The covers are not to be treated.

(2) Remove the front covers of the two regulated tube rectifiers. The covers are not to be treated.

(3) Remove the two spare polar relays (not to be treated) located between the two regulated tube rectifiers. Open the hinged front of the fuse panel.

(4) Disassemble the channel frequency oscillator panel as follows:

(*a*) Remove the four polar relays (not to be treated).

Note. Install or replace the gas absorbing units. (See par. 62*f*.)

(*b*) Remove the fiber dust cover located on the upper side of the control panel. To free this cover, remove the six small cover retaining screws and loosen the six mounting screws of the control panel.

(*c*) Remove the receiver panel from its mounting. Do not disconnect.

(5) Open the hinged panel carrying the *Summary of Instructions* and remove the eight polar relays.

(6) Open the loop control panel and the filter and test panel.

c. CLEANING. Clean all the dirt, dust, rust, fungus, oil, grease, etc., from the equipment to be processed.

d. MASKING.

Note. The term *masking* as used in these instructions refers to the general application of protective coverings and masks to this equipment. To *mask* an item means to protect the specified whole, or portion thereof, with masking tape only. To *cover* an item means to protect the specified whole, or part thereof, with paper or cloth and to seal the edges of the paper or cloth with masking tape.

(1) *Shock mountings.* Cover the rubber shock mountings on the front of the bay. (See (1), fig. 22.)

(2) *Carrying case.* Cover all tool and fuse holders mounted on the left inner side of the carrying case. (See (2), fig. 22.)

(3) *Filter and test panel.* (*a*) Cover the front of the hinged panel. (See (1), fig. 23.)

(*b*) Cover the front and rear of the SEND FILTER selector switch. (See (2), fig. 23.)

(*c*) Cover the four transfer keys so that their operating mechanisms and spring contacts are protected and their soldering lugs and insulating spacers are exposed. (See (8), fig. 23.)

(*d*) Cover the protectors located at each end of the hinged panel so that their receptacles are protected and their bases exposed. (See (3), fig. 23.)

(4) *Loop control panel.* (*a*) Mask the fronts of the eight polar relay sockets. (See (5), fig. 23.)

(*b*) Close the upper panel and mask its face. (See (6), fig. 23.)

(*c*) Cover the front and rear of the hinged control panel completely. (See (7), fig. 23.)

(5) *Receiver panel.* (*a*) Cover the rear of each of the four selector switches on the panel (See (20), fig. 24.)

(*b*) Cover the face of the panel. (See (19), fig. 24.)

(*c*) Mask the selenium stack (varistor RV1).

(6) *Channel frequency oscillator panel.* (*a*) Mash the fronts of the four polar relay sockets. (See (1), fig. 24.)

(*b*) Mask the mounting bushing of the SEND LEVEL and SEND CARR selector switches. (See (2), fig. 24.)

(*c*) Cover each jack and switch on the control panel so that their spring contacts are protected and their soldering lugs and insulating spacers are exposed. (See (2), fig. 24.)

(*d*) Mask the face of the control panel. (See (2), fig. 24.)

(7) *Regulating tube rectifier (two per bay).* (*a*) Mask the caps of the two rectifier tubes. (See (3) and (4), fig. 24.)

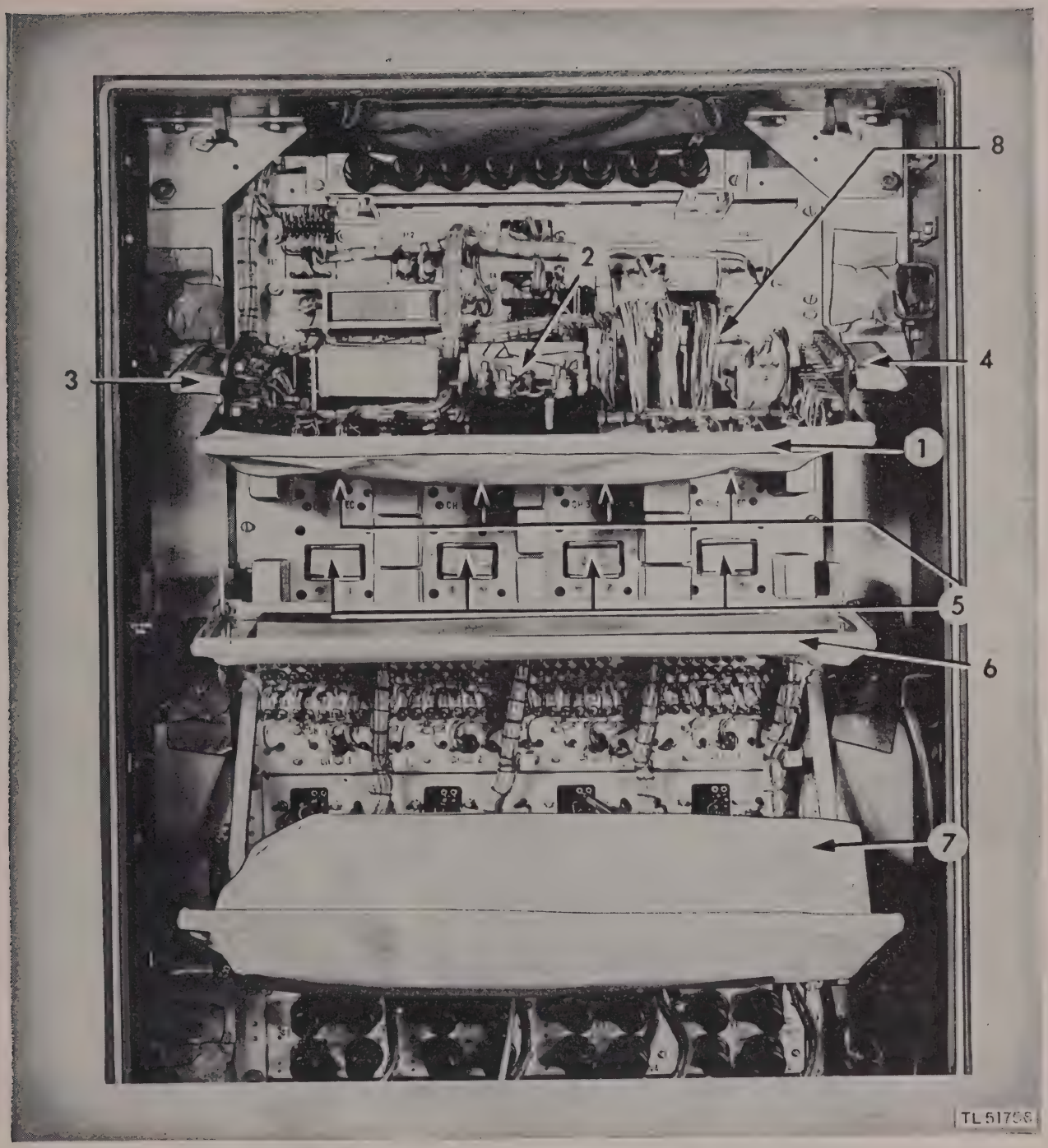

Figure 23. Front view of upper half of bay, masking details.

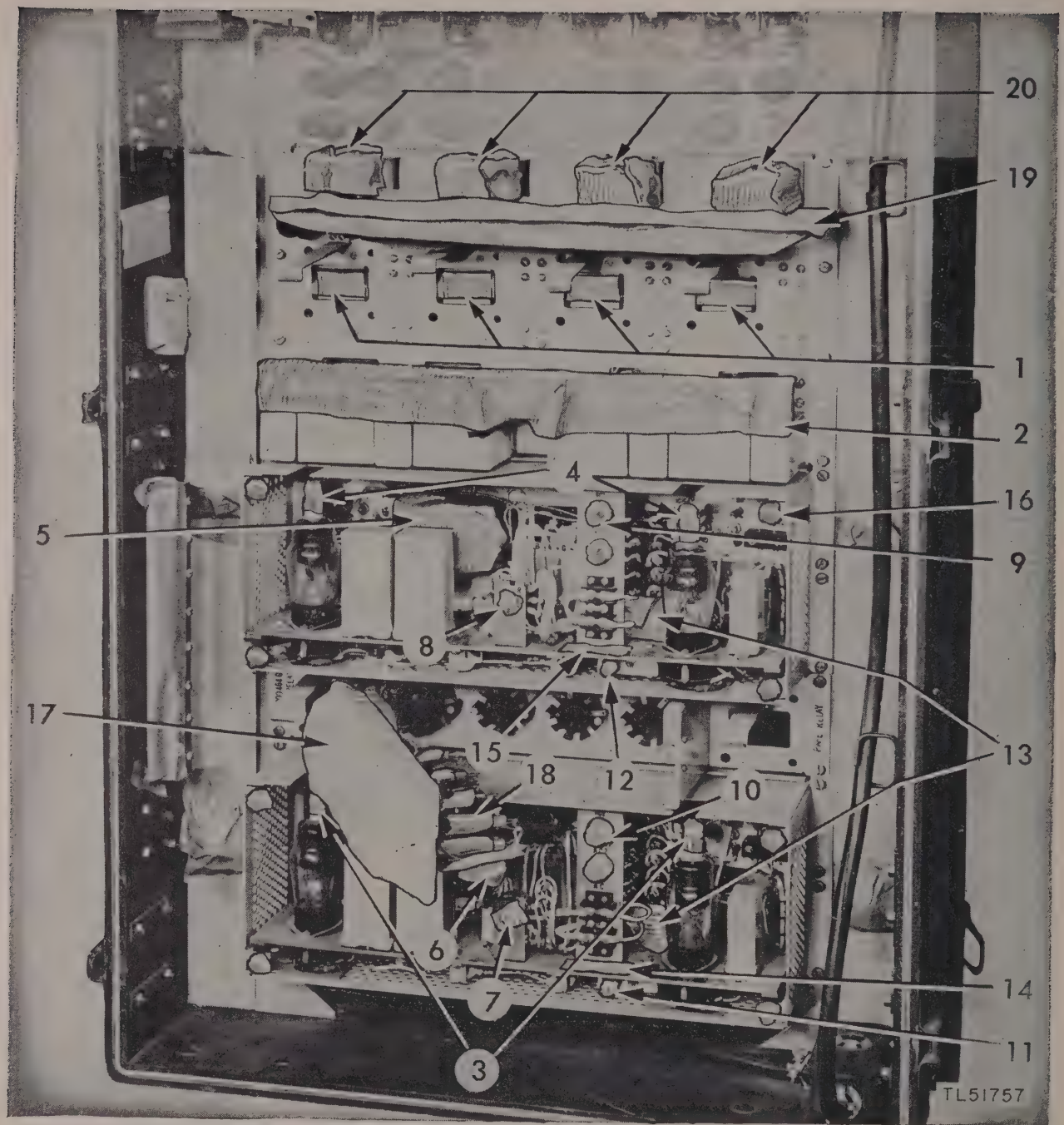

Figure 24. Front view of lower half of bay, masking details.

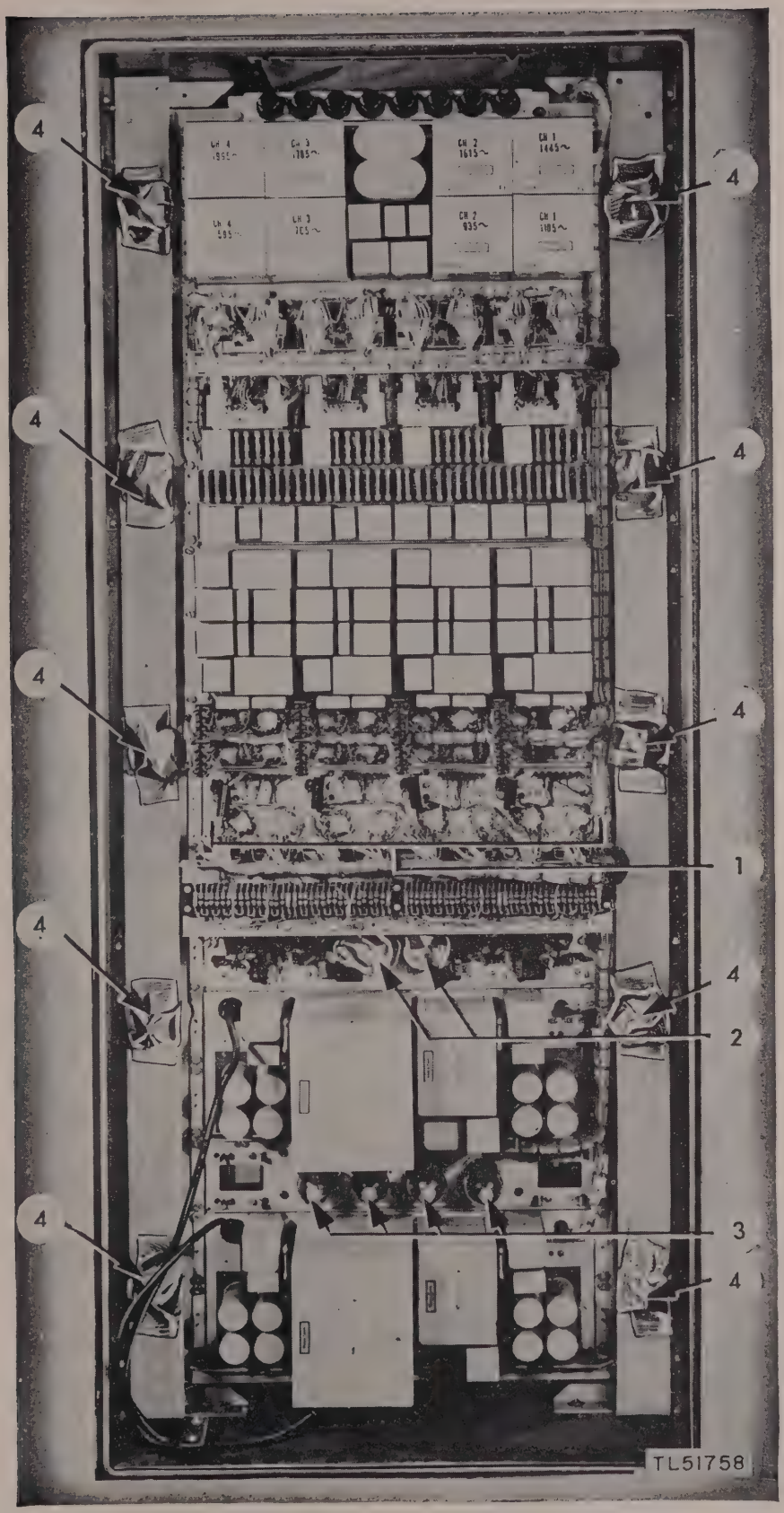

Figure 25. Rear view of bay, masking details.

(*b*) Cover the adjustable reset timer. (See (5) and (6), fig. 24.)

(*c*) Mask the screw driver adjustment and the mounting bushing of the potentiometer. (See (7) and (8), fig. 24.)

(*d*) Mask the tops of the AC1 and AC2 extractor-type fuse holders. (See (9) and (10), fig. 24.)

(*e*) Mask the plunger and mounting bushing of the SW1 cover switch. (See (11) and (12), fig. 24.)

(*f*) Cover the protective relay mounted in the back of the terminal block. (See (13), fig. 24.)

(*g*) Mask the small diagram plate below the terminal block. (See (14) and (15), fig. 24.)

(*h*) Mask each of the cover retaining bolts. (See (16), fig. 24.)

(*i*) Mask the selenium stacks (varistors A, B, H).

(8) *Fuse panel.* (*a*) Cover the face of the panel. (See 17), fig. 24.)

(*b*) Cover the eight jacks so that their spring contacts are protected and their soldering lugs and insulating spacers are exposed. (See (18), fig. 24.)

(9) *Rear of bay.* (*a*) Mask the locating pin openings in the bottoms of the 16 vacuum-tube sockets of the loop control panel and the 8 vacuum-tube sockets of the channel frequency oscillator panel. (See (1), fig. 25.)

(*b*) Cover the SEND LEVEL and the SEND CARR selector switches of the channel frequency oscillator panel. (See (2), fig. 25.)

(*c*) Mask the caps of the four spare rectifier tubes. (See (3), fig. 25.)

(*d*) Cover the rubber shock mountings. (See (4), fig. 25.)

e. DRYING. Dry the bay, the 14 polar relays, and the removed fiber dust cover for 4½ to 5½ hours at 135° F. Do not exceed 135° F.

f. VARNISHING. (1) Apply three coats of moistureproofing and fungiproofing varnish (Lacquer, Fungus-resistant, Signal Corps stock No. 6G1005.3, or equal). Allow each coat to air-dry for 15 or 20 minutes before applying the next coat.

(2) Apply varnish immediately after the equipment is dried. If varnish is not applied immediately, moisture condenses on the equipment. Varnish applied over the moisture peels off readily after the varnish has dried.

(3) Spray all exposed wiring, connections, and small parts. Pay particular attention to the card type resistors and resistor cards.

(4) After three spray coats have been applied, remove all coverings and masking tape.

(5) Brush all wires and connections where protected by the masking.

(6) Using a full brush, seal these portions of the measuring panel meter:

(*a*) The joint between the backplate and the meter shell.

(*b*) The backplate retaining screws.

(*c*) The edge of the meter glass and the zero-set adjustment.

(7) Brush the back and front of the binding post panels; do not allow the varnish to run into the tops of the posts.

(8) Brush the following items of the hinged panel of the loop control panel, which was completely covered during the spraying operations:

(*a*) The body of each potentiometer (12 in all), being careful not to coat the contact path or the contact arm and bearing.

(*b*) The spring contact insulating spacers and the soldering lugs of the jacks and transfer keys.

(*c*) All resistors and capacitors.

(*d*) All wires and connections.

(9) Brush the removed fiber dust cover completely.

g. REASSEMBLY. (1) Clean all contacts with varnish remover, and burnish the contacts.

(2) After the equipment is dry, reassemble it by reversing the sequence given in *b* above.

Caution. Do not reassemble the equipment until it is completely dry.

(3) Subject the equipment to the customary routine tests to insure its correct operation.

h. MARKING. Mark the letters MFP and the date of treatment near the nameplate inside the cabinet on the left-hand side.

Example. MFP–1 July 45.

37. Treating Equipment After Repairs

If the coating of protective varnish has been punctured or broken during repair and if complete treatment is not needed to reseal the equipment, brushcoat the affected part. Be sure the break is completely sealed.

PART FOUR

AUXILIARY EQUIPMENT

(Not used.)

WAR DEPARTMENT

UNSATISFACTORY EQUIPMENT REPORT

FOR	TECHNICAL SERVICE: Signal Corps. MATÉRIEL		DATE: 19 June 1945
FROM	ORGANIZATION: 437th Signal Repair Co.		STATION: APO 000 New York N.Y.
TO	NEXT SUPERIOR HEADQUARTERS: Signal Officer Sixth Army	STATION: APO 000 New York, N.Y.	TECHNICAL SERVICE: Signal Corps

COMPLETE MAJOR ITEM

NOMENCLATURE	TYPE	MODEL
Telephone Terminal (Carrier)	CF-00	A

MANUFACTURER	U. S. A. REG. No.	SERIAL No.	DATE RECEIVED
Blank Company		2780	1 June 1945

EQUIPMENT WITH WHICH USED (*if applicable*): Telegraph Terminal Set TC-00, Repeater Set TC-00, and Ringer Set TC-00.

DEFECTIVE COMPONENT—DESCRIPTION AND CAUSE OF TROUBLE

PART No.	TYPE	MANUFACTURER	DATE INSTALLED
3X12345	Rectifier, varistor.	Roe and Co.	3 June 1945

DESCRIPTION OF FAILURE AND PROBABLE CAUSE (*If additional space is required, use back of form*): Varistor bridge TR unbalanced due to moisture.

DATE OF INITIAL TROUBLE	TOTAL TIME INSTALLED			TOTAL PERIOD OF OPERATION BEFORE FAILURE					
	YEARS	MONTHS	DAYS	YEARS	MONTHS	DAYS	HOURS	MILES	ROUNDS
17 June 1945			14			12	6		

BRIEF DESCRIPTION OF UNUSUAL SERVICE CONDITIONS AND ANY REMEDIAL ACTION TAKEN: Poor transmission, poor quality. Repair attempted but unsuccessful, varistor replaced.

TRAINING OR SKILL OF USING PERSONNEL			RECOMMENDATIONS (*If additional space is required, use back of form*)
POOR	FAIR	GOOD	
		X	More positive type of moistureproofing.

ORIGINATING OFFICER

TYPED NAME, GRADE, AND ORGANIZATION	SIGNATURE
JOHN A. DOE, Capt., Sig. C. 437th Signal Repair Co.	John A. Doe

FIRST ENDORSEMENT

TO CHIEF	TECHNICAL SERVICE	OFFICE	
NAME, GRADE, AND STATION		STATION	DATE

Instructions

1. It is imperative that the chief of technical service concerned be advised at the earliest practical moment of any constructional, design, or operational defect in matériel. This form is designed to facilitate such reports and to provide a uniform method of submitting the required data.
2. This form will be used for reporting manufacturing, design, or operational defects in matériel, petroleum fuels, lubricants, and preserving materials with a view to improving and correcting such defects, and for use in recommending modifications of matériel.
3. This form will not be used for reporting failures, isolated material defects or malfunctions of matériel resulting from fair-wear-and-tear or accidental damage nor for the replacement, repair or the issue of parts and equipment. It does not replace currently authorized operational or performance records.
4. Reports of malfunctions and accidents involving ammunition will continue to be submitted as directed in the manner described in AR 750-10 (change No. 3).
5. It will not be practicable or desirable in all cases to fill all blank spaces of the report. However, the report should be as complete as possible in order to expedite necessary corrective action. Additional pertinent information not provided for in the blank spaces should be submitted as inclosures to the form. Photographs, sketches, or other illustrative material are highly desirable.
6. When cases arise where it is necessary to communicate with a chief of service in order to assure safety to personnel, more expeditious means of communication are authorized. This form should be used to confirm reports made by more expeditious means.
7. This form will be made out in triplicate by using or service organization. Two copies will be forwarded direct to the technical service; one copy will be forwarded through command channels.
8. Necessity for using this form will be determined by the using or service troops.

W. D., A. G. O. Form No. 468
30 August 1944

This form supersedes W. D., A. G. O. Form No. 468, 1 December 1943, which may be used until existing stocks are exhausted.

U. S. GOVERNMENT PRINTING OFFICE 16—41548-1

TL54652S

Figure 26. WD AGO Form 468.

PART FIVE

REPAIR INSTRUCTIONS

Note. Failure or unsatisfactory performance of equipment used by Army Ground Forces and technical services will be reported on WD AGO Form 468 (Unsatisfactory Equipment Report); by Army Air Forces, on AAF Form 54 (Unsatisfactory Report). (See par. 39.)

Section XII. GENERAL REPAIR PROCEDURE

38. Outline of Repair Technique

a. A complete knowledge of the detailed functions of the various parts and circuits in the equipment and the trouble location procedures is necessary to perform satisfactory repairs. Keep service failures to a minimum by careful handling of the equipment during installation and operation, and by being careful when making field repairs and adjustments. Do not disturb the wiring any more than is necessary in testing or inspecting. Do not drop splashes of solder on apparatus parts or wiring terminals.

b. To assist in localizing trouble, tables are included listing trouble indications, probable causes, and the remedy for the causes listed. Wiring diagrams are furnished with each bay of equipment on the inside of the rear cover as an aid in trouble location. Reproductions of these wiring diagrams and also of schematic diagrams are included at the end of this manual.

c. Repair instructions contained in this manual are for first, second, and third echelon maintenance personnel. For instructions on fourth and fifth echelon maintenance refer to TM 11–4402.

39. Unsatisfactory Equipment Report

a. When trouble in equipment used by Army Ground Forces or technical services occurs more often than repair personnel feel is normal, WD AGO Form 468 (Unsatisfactory Equipment Report) (fig. 26), should be filled out and forwarded through channels to the Office of the Chief Signal Officer, Washington 25, D. C.

b. When trouble in equipment used by Army Air Forces occurs more often than repair personnel feel is normal, AAF Form 54 should be filled out and forwarded to Commanding General, Air Matériel Command, Wright Field, Dayton, Ohio, in accordance with AAF Regulation No. 15–54. If form is not available, prepare the data according to the sample form shown in figure 27.

Section XIII. DETAILED FUNCTIONING OF EQUIPMENT

40. Carrier Circuit Arrangement

a. GENERAL. (1) Figure 49 is a general schematic diagram showing the carrier portions of the telegraph circuits from terminal to terminal and the principal component parts of the four-channel carrier telephone system, over one channel of which telegraph operation normally takes place. The telegraph equipment is that part of the figure shown under the headings terminal A and terminal B. The designations A and B are chosen for supervisory purposes and have no significance as far as equipment arrangements are concerned. Either a Telegraph Terminal CF–2–A (Carrier), consisting of two bays of two channels each, or a Telegraph Terminal CF–2–B (Carrier), consisting of a single bay containing the four channels, may be used at either terminal A or terminal B. The detailed description in this section, however, applies specifically to Telegraph Terminal CF–2–B (Carrier).

(2) With the exception of the lines showing the loop and SX (simplex) connections, each line in figure 49 represents a pair of wires. The conductors shown as R LOOP and S LOOP represent loop circuits to receiving and sending telegraph equipment at the station. The arrangement shown is that for full-duplex operation, in which the transmission of signals to the telegraph station takes place over the R LOOP and from the station over the S LOOP. The S (sending) loop connects to a sending relay and associated equipment in the sending

WAR DEPARTMENT
AAF Form No. 54
(Revised 2-18-43)

WAR DEPARTMENT
ARMY AIR FORCES
UNSATISFACTORY REPORT
(See AAF Reg. 15-54 for Information on Proper Use of this Form)

TO BE FILLED IN BY STATION	
STATION SERIAL No.	DATE SUBMITTED
45-105	8 Mar 45

LEAVE BLANK		
A. S. C. SERIAL No.	REFER TO	CLASS

STATION: Camp Pinedale, WSAUTC, Fresno, Calif.			ORGANIZATION: 3d Echelon Comm. Maint. Shop	
SUBJECT OF REPORT	Property Class—Name: Signal Corps Line Unit BR-100-A		Manufacturer: Blank Co.	AAF Order or Shipping No.
AIRCRAFT—Model & AAF Serial No.	ENGINE—Model & AAF Serial No.		UNIT OR ACCESSORY—Type, Model and Serial No.	
AIRCRAFT REPORTS ONLY	LAST D. I. R.—Depot		Date	Flying Time Since / Total Flying Time
ENGINE REPORTS ONLY	LAST OVERHAUL—Depot	Hours Since	Depots and Hours At Each Previous Overhaul	

PART	Name		Part Drawing, Serial and Specification No.			
	Sub-Base for Line Relay #00-B		4A2031B/B1			
	Time in Use	Quantity on Hand	Quantity Known Defective	No. Previous Failures	Manufacturer	Inspector's No. or Identification
	6 months	1	0	6	Blank Co.	

Indicate by "X" Disposition of Exhibit	Photographed and Prints Enclosed	Held for Instructions	Sent Under Separate Cover	Sent in Attached Package	Repaired and Returned to Service	Disposed of (Explain Below.)	To Overhaul Facility (INITIALS)
					X		

GIVE COMPLETE DETAILS, PROBABLE CAUSES AND RECOMMENDATIONS BELOW:
(Use Only Applicable Spaces Above—Avoid Unnecessary Repetition)

EXPEDITE

1. DESCRIPTION OF UNSATISFACTORY CONDITION: In the repair of field type teletype-writers, and especially in the associated Line Unit BR-100-A, several of the sub-bases for Line Relay #00-B are frequently found broken. The sub-base is located in the line unit and holds the relay in position. Contact is made by banana type terminals.

2. PROBABLE CAUSES: Insertion of the relay is satisfactory but, to remove the relay from the line unit for inspection or adjustment, it is necessary to jostle it up and down and pull forward. This action, and the fact that the sub-base is constructed of thin bakelite and held in position in the rear only, causes frequent breakage of the sub-bases. To replace the sub-base requires consider-able work and man hours.

3. RECOMMENDATIONS: It is recommended that a brace which has been developed to prevent this breakage of the sub-bases be used, thereby eliminating the necessity for replacement involving material and man-hours.

a. Materials used for the brace are: One piece of 1/16-inch sheet iron 5-3/4 inches in length, 1/2 inch wide; one piece of 1/16-inch sheet iron 3 inches in length, 1/2 inch wide; and four 4-40 1/2-inch flathead machine screws, with nuts. All holes are drilled with 1/8-inch drill-countersunk where shown. Similar holes are drilled in the line unit cover and base to properly install the brace. A mark may be made on the 5-3/4-inch sheet iron, 4-1/4 inches from the top and centered at the center mark of the jig hump to facilitate more accurate shaping of the brace.

b. The shaping of this brace is simplified by the machining of a jig as shown in the drawings. The sheet iron can then be set in the jig and pressed into shape by the use of a vise.

1 Incl:
Drawings

Lambert L. Dooley
LAMBERT L. DOOLEY
1st Lt, Signal Corps
OIC, 3d Ech Comm Maint Rep Shop

ROUTING SEND ORIGINAL AND TWO COPIES DIRECT TO COMMANDING GENERAL, HQ. AIR SERVICE COMMAND, PATTERSON FIELD, FAIRFIELD, OHIO.

☆ U. S. GOVERNMENT PRINTING OFFICE : 1943 16—34619-1

TL55301S

Figure 27. AAF Form 54.

circuit. The sending circuit also includes an oscillator to supply the carrier current which is interrupted by the sending relay to produce telegraph signals, a pad, and a band-pass filter. The signals from the loop associated with any one of the telegraph channels are transmitted by the sending circuit over one of the channels of the carrier telephone system. (See fig. 49.) Their signals are received in the receiving circuit of the corresponding channel terminal at the distant end of the carrier line. The receiving circuit contains a band-pass receiving filter, other equipment consisting of an amplifier detector which converts the spurts of carrier signals into d-c pulses, and a receiving relay which operates from these pulses and transmits d-c signals over the R (receiving) loop to the station. These features of the telegraph circuits, and the different types of telegraph loops that may be used, are described in detail in this section.

(3) Although this telegraph system may be operated over other line facilities, either on a two-wire or a four-wire basis, it was designed for operation on a two-wire basis over the carrier telephone system using Telephone Terminals CF–1–(*) (Carrier). A typical overall system of this type is shown in the upper part of the block diagram. (See fig. 49.) This carrier telephone system consists of four channels. One channel operates at voice frequency and the other three use the lower side bands of 5,900-, 8,850-, and 11,800-cycle carrier frequencies, respectively. They are shown in that order as channels 1 to 4, inclusive. Operate the telegraph on channel 3 to avoid interfering with the routine procedure of maintaining the telephone system. The telephone terminals are arranged to give special protection to this channel against accidental interruptions. From a transmission standpoint, channel 2 is almost as satisfactory. The telegraph may be routed over any one of the four channels in an emergency. The net loss of the telephone channel between two-wire terminations (normally 6 db) should lie between the limits of 0 to 10 db, although the telegraph system will operate even if the loss between telegraph terminals is as much as 25 db. The variations in net loss from the mean should not exceed ± 7 db, and should never be enough to cause the circuit to sing. The net loss of the telephone channel may be adjusted, if necessary, to a suitable value by means of the channel GAIN dial (voice-frequency amplifier, which is located in the output of the demodulator), without affecting the other telephone channels. A telephone channel satisfactory for telephone service can usually be used for telegraph operation without further attention and will work satisfactorily without special maintenance.

b. Telegraph Carrier Frequencies. (1) This telegraph system uses eight carrier frequencies in the voice range, making use of two frequencies for each channel; one for transmission in one direction, and the other for transmission in the opposite direction. The four frequencies used for transmission in each direction are in a group, and are spaced 170 cycles apart. The group consisting of the higher frequencies is referred to as the higher frequency group, and the other as the lower frequency group. When the system is operated on a two-wire basis, transmission in both directions takes place over the same pair of wires. When the system is operated on a four-wire basis, separate paths are used for the two directions of transmission. The two groups of four frequencies each can be used independently as sending frequencies and receiving frequencies, thus making eight-channel operation possible. For eight-channel operation two Telegraph Terminals CF–2–B (Carrier) are needed at each terminal point; one using the higher group of frequencies for sending, and the other, the lower group of frequencies for receiving. The frequencies for the various channels are shown in table IX.

Table IX. Channel frequencies

Channel number	Terminal A (cps)			Terminal B (cps)		
	Sending		Receiving	Sending		Receiving
1	1,445		1,105	1,105		1,445
2	1,615	Send	935	935	Send	1,615
3 Bay1	1,785	A (HIGH)	765	765	B (LOW)	1,785
4	1,955		595	595		1,955
5	1,105		1,445	1,445		1,105
6	935	Send	1,615	1,615	Send	935
7 Bay2	765	B (LOW)	1,785	1,785	A (HIGH)	765
8	595		1,955	1,955		595

(2) Figure 28 shows the allocation of these frequencies, and also gives typical transmission-

frequency characteristics relative to the mid-band attenuation for the individual filters. The attenuation values are approximate.

c. LINE-COIL CONNECTIONS. (1) A telephone circuit is connected on a two-wire or four-wire basis to the telegraph terminals through 1:1-ratio shielded and balanced transformers called line coils. These coils separate the line, which is balanced to ground, from the filters, which are unsymmetrical networks with one side grounded. The impedance toward the line coils is substantially 600 ohms in both directions.

(2) There are two line coils in each bay. (See figs. 19 and 50.) These coils are marked T4 and T3 and are located on the rear of the filter and test panel. The terminals are brought out to binding posts at the top of the bay. Coil T4 terminates in two binding posts T and R, marked LINE 1. Coil T3 terminates similarly in two binding posts T and R, marked LINE 2. When operation is on a two-wire basis, the line is connected to the LINE 1 terminals of coil T4, and coil T3 is not used. When operation is on a four-wire basis, separate pairs of line conductors are connected to the LINE 1 and LINE 2 binding posts. On the equipment side, the windings of the two coils are permanently connected on the ground side to binding post BT. The ground connection is made by strapping the BT and GRD (ground) binding posts. The other end of the winding of coil T4 is connected to a binding post marked LR, and similarly coil T3 is connected to binding post HR. The higher-frequency filters are connected in parallel to binding posts H, and the lower-frequency filters to binding post L. When operation is on a four-wire basis, binding post L is connected to LR, and binding post H to HR. When operation is on a two-wire basis, the sending and receiving filters of all channels are connected in parallel by a strap wire between binding posts H and L. These posts are connected to coil T4 by another strap wire between binding posts L and LR. This latter connecting arrangement is shown on a chart below the binding posts, and the detailed connections for four-wire operation on both a four-channel and an eight-channel basis are shown in figure 19.

d. OSCILLATOR FREQUENCY AND FILTER CONTROL. (1) The oscillator of each channel terminal is adjusted to send either of the two frequencies assigned to the channel. There are also two filters for each channel terminal, either of which may serve as a sending filter while the other serves as a receiving filter. A common switch for the bay, marked SEND FREQ and located on the frequency oscillator panel, controls the selection of the oscillator

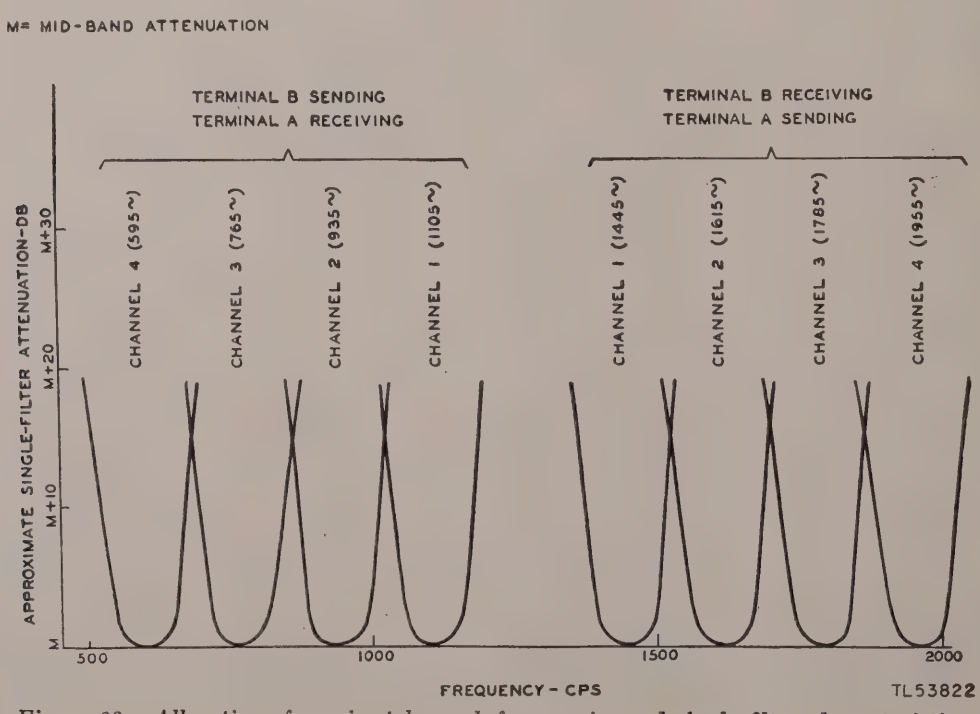

Figure 28. Allocation of carrier telegraph frequencies and single filter characteristics.

frequency. A common switch marked SEND FILTER, located on the filter and test panel, controls the selection of the filters as sending or receiving filters. At terminal A of a four-channel system, both of these switches are turned to the position marked A (HIGH). Each of the oscillators on the bay sends out the higher of the two frequencies of its respective channel, the higher-frequency filter becoming the sending filter and the lower-frequency filter the receiving filter. The other terminal of the system, called a B terminal, must then use the lower frequency for sending and the higher frequency for receiving. This selection is made by turning the SEND FREQ and SEND FILTER switches to their B (LOW) positions. *Set the SEND FREQ and SEND FILTER switches on the same bay in the same position with both on A (HIGH) or B (LOW). This is important.*

(2) For eight-channel operation, use two Telegraph Terminals CF–2–B (Carrier) at each terminal point, connected to the line on a four-wire basis. The second bay, providing channel terminals 5 to 8, uses the B (LOW) frequency assignment at an A terminal and the A (HIGH) frequency assignment at a B terminal.

41. Principles of Operation

a. Production of Carrier Telegraph Signals (fig. 49). (1) Alternating current, supplied by an oscillator, is connected to the line through a band-pass filter. The sending relay, operated by d-c signals received from the sending loop, shortcircuits this source of current for intervals of time corresponding to spaces and permits the current to go on to the line for marks. The telegraph signals are then said to modulate a carrier of voice frequency.

(2) The modulated carrier current produced, together with similar signals of other frequencies from the other telegraph channels, is usually transmitted over one of the carrier *telephone* channels. The current resulting in this carrier telephone channel combines with the currents in the other two carrier telephone channels and the current in the voice-frequency telephone channel. This resulting current is transmitted over the spiral-four cable to the distant telephone terminal. At this receiving telephone terminal, the various frequency bands are separated by their respective filters. One of the frequency bands, thus segregated, contains all the carrier telegraph signals. These signals pass through the hybrid coil of the telephone terminal to the voice-frequency telegraph equipment. Here the various voice-frequency carrier telegraph currents are separated by the telegraph band-pass filters in the receiving branches of the four telegraph channels. The current in each channel is amplified and converted to d-c signals, which operate the receiving relay associated with that channel. This relay, therefore, repeats, into the receiving loop, the d-c marks and spaces originating in the sending loop of that channel at the other end of the system.

(3) The opening and closing of the sending telegraph relay produces square impulses of carrier current corresponding to the marking intervals. These are interspersed with periods when there is no current at all, corresponding to the spacing intervals. An instructive case arises if an indefinite sequence of marks and spaces of equal duration is transmitted. If such a current is analyzed, it is found to contain frequencies on either side of the carrier frequency, which are called side bands. These frequencies are equally spaced above and below the carrier frequency, and depart from it by amounts which are equal to the frequency of the reversals (dotting speed) and all odd multiples (harmonics). These side-band frequencies decrease in magnitude as they depart from the carrier frequency. (See fig. 29.)

b. Effect of Telegraph Filters. A sending filter is used to suppress all side-band frequencies which are not essential to satisfactory signal transmission in each channel. The function of the receiving telegraph filter is to separate the carrier and side bands pertaining to each channel from all the others and to guide them into the proper receiving circuit. At this point, the carrier and its side bands are rectified and produce d-c pulses which correspond to the transmitted signals. These signals operate the receiving relay.

c. Modulation in Telephone Terminals. When they reach the carrier-telephone transmitting terminal, the four carrier telegraph frequencies as a group, including their used side bands, modulate the telephone-channel-carrier frequency and are transposed in frequency for transmission over the circuit. At

the receiving end they are retransposed, also as a group, to their original position in the frequency spectrum, by demodulation of the telephone-channel frequencies. However, this will not occur unless the oscillators associated with the telephone modulator and demodulator at the two ends of the telephone circuit operate at exactly the same frequency. If the frequencies of the oscillators differ, there will be a shift of all telegraph frequencies by an amount equal to the difference between the frequencies of the two oscillators. If the amount of this shift is excessive, the telegraph signals may be distorted. The type of telegraph operation used is not very sensitive to such changes. There should be no noticeable signal distortion if the telephone oscillators at the two ends of the circuit are both kept within plus or minus 15 cycles of the theoretical-carrier frequency.

d. EFFECTS OF OVERLOADING. (1) If the sum of the carrier-telegraph currents from the four telegraph channels entering a telephone-circuit modulator is more than a certain amount, these currents will produce frequencies which may affect signal quality. Keep to the values given in this manual for transmitting telegraph currents. They provide a safe margin against this effect.

(2) Excessively loud speech may cause interaction between voice currents and telegraph currents in the line amplifiers and loading coils of the carrier telephone system. Protection against such interaction is obtained in the telephone system by a special volume limiter in the voice-frequency circuit (channel 1), and by a modulator design which does the same thing for channels 2, 3, and 4.

42. Sending Circuit

a. GENERAL. The principal elements of the sending circuit are shown in figure 49. A functional diagram of the circuit is shown in the lower part of figure 30.

b. CARRIER SUPPLY. (1) As stated in paragraph 40*d*, an oscillator adjusted to send either of the two channel frequencies is provided for each channel. The frequency produced by the oscillator is under the control of the SEND FREQ switch. When operated to A (HIGH), it sends out the higher of the two frequencies, and when operated to B (LOW), it sends out the lower frequency. This SEND FREQ switch is not shown in figure 30.

(2) The tuning circuit consists of an inductance and a capacitance. The parallel resonant circuit consists of winding 1–4 of the tapped input transformer T5, tuning capacitors C17 and C33 for the low frequencies, and tuning capacitors C34 to C50 for the high frequencies. In figure 30 the tuned circuit is shown connected for either the 595- or 765-

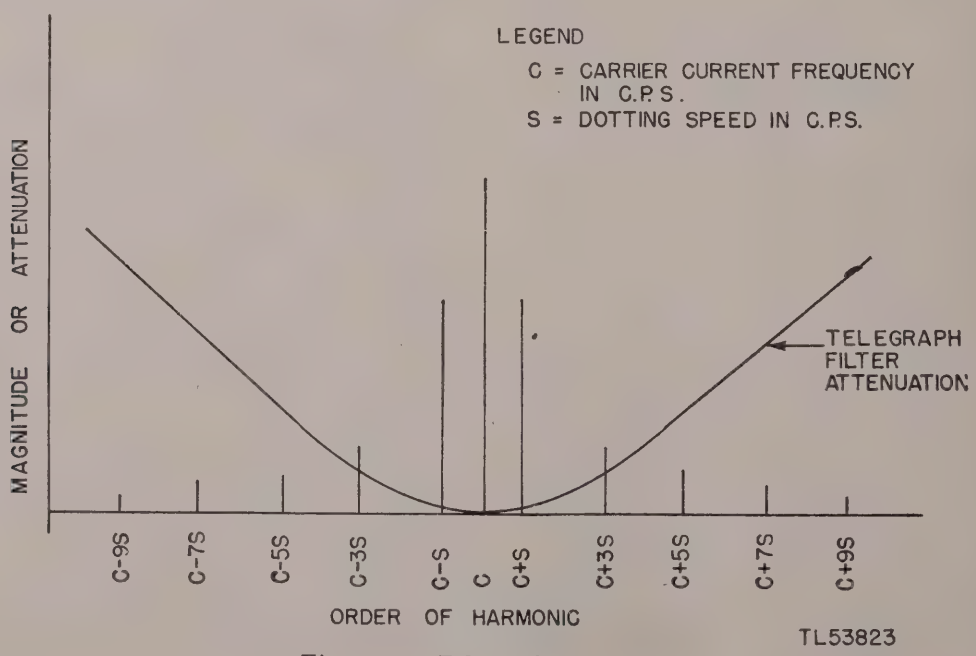

Figure 29. Telegraph spectrum.

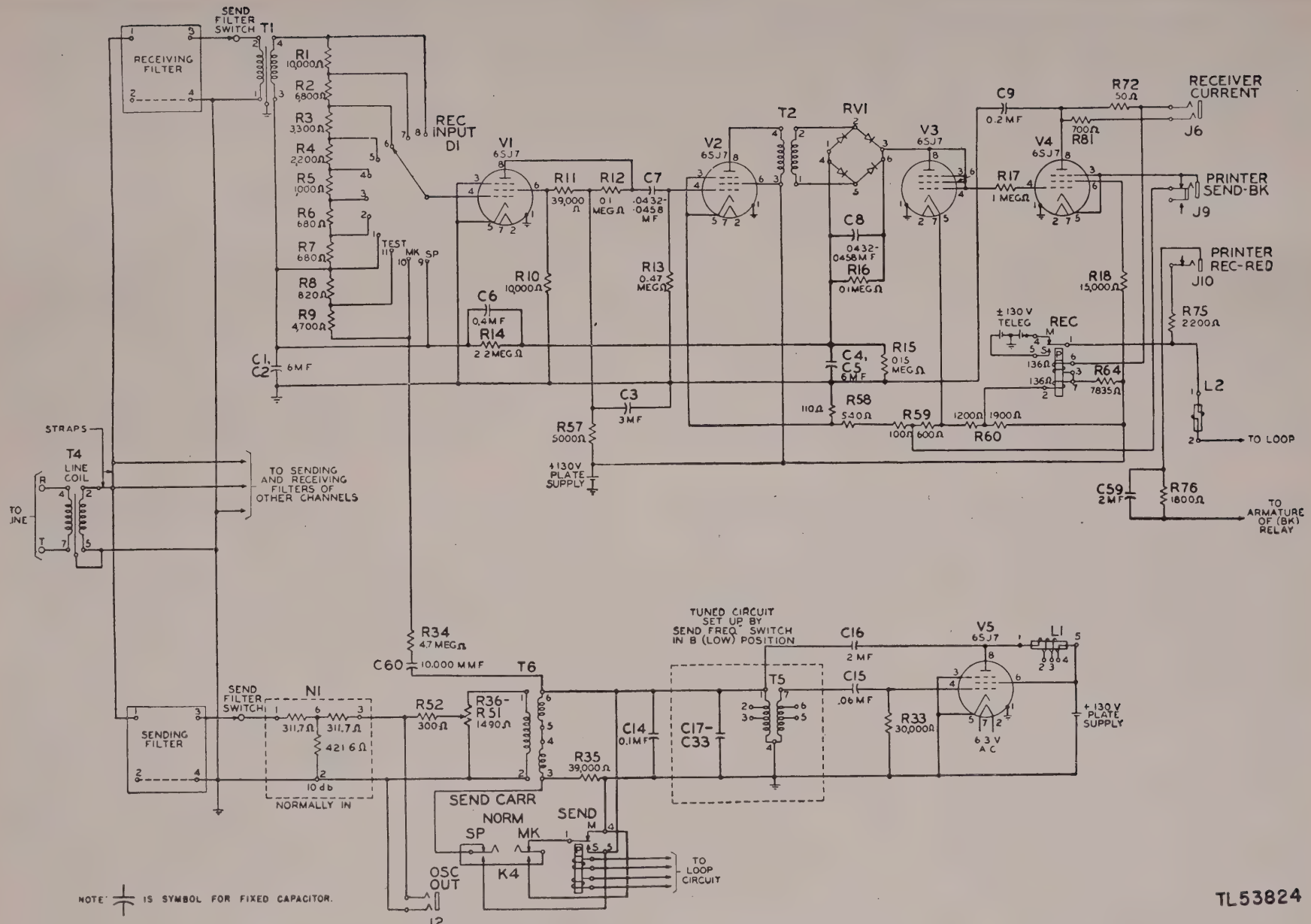

Figure 30. Sending and receiving circuits, functional diagram.

cycle oscillator. The resonant circuit is tuned to the desired channel-carrier frequency by adjusting capacitors C17 to C33. The alternating current in the tuned circuit induces an alternating voltage in winding 4–7 of transformer T5, which is applied to the grid of tube V5 through capacitor C15. The grid voltage is amplified by the tube, and a portion of the amplified voltage is fed back to the tuned circuit through capacitor C16 to sustain the oscillations. The oscillations increase in amplitude until the grid-voltage swing is sufficient to cause grid current to flow during a portion of the positive part of the cycle. This grid current, flowing through resistor R33, furnishes a negative bias to limit the gain of the tube to such a value that the oscillator output becomes constant. This condition is established shortly after plate and filament voltages are connected to the tube. The amplified alternating voltage, appearing at the plate of the tube and across the tuned circuit, causes an alternating current to flow in winding 3–6 of transformer T6. This current induces an alternating voltage in winding 1–2 of transformer T6. This transformer is connected to resistors R36 to R51, which form a potentiometer.

(3) The potentiometer formed by resistors R36 and R51 is tapped to give the correct carrier-current level at the output of the sending filter. Owing to differences in the efficiency of the oscillator at different frequencies, and variations in losses of sending filters, different taps may be required for the two alternative settings of the oscillator frequency, and the wiring is arranged for this. These taps are preadjusted and seldom need readjustment.

(4) The carrier current, flowing in winding 3–6 of transformer T6, is modulated by the operation of the SEND relay, which repeats signals originating in the loop circuit. When the SEND relay is on the marking contact M, resistor R35 is short-circuited and the full level of the carrier current flows in the circuit. When the armature is in midposition between the M and S contacts, resistor R35 is inserted in series with winding 3–6 of transformer T6, and the carrier output level at the line coil drops approximately 6 db below the marking carrier level. When the SEND relay is operated to contact S, winding 3–6 of transformer T6 is short-circuited and no carrier current is transmitted to the line coil. When the SEND relay is operated, spurts of carrier current, corresponding to the mark impulses of the signals in the loop circuit, are transmitted to the carrier line circuit.

c. SENDING LEVEL. The 10-db pad N1 is connected between transformer T6 and the sending filter when the SEND LEVEL knob is operated to LOW, and is removed from the circuit when the knob is turned to HIGH. The SEND LEVEL knob is set on LOW unless the net loss between the telegraph terminals exceeds 15 db, in which case the knob is set on HIGH. (See par. 16*b*.) If the carrier-telegraph system is used over a noisy open-wire line having high attenuation, remove the pad N1 from the circuit by operating the SEND LEVEL knob to HIGH. This increases the signal-to-noise ratio and may result in improved telegraph transmission. Be careful not to overload the telephone modulators when operation is over a carrier-telephone channel. Keep the SEND LEVEL knob turned to LOW when operating over such circuits. If the carrier-telephone circuit becomes so noisy that the frequency of occurrence of errors in received copy cannot be tolerated, it may be possible to maintain telegraph service over one (or even two) channels, by turning off the carrier current from the remaining channels (turning SEND CARR knob to SP), and turning the SEND LEVEL knob of the operating channel to HIGH. Do this at both ends of the carrier circuit, or the difference in levels between the transmitted and received power will be excessive. Under this condition, the teletypewriters at the receiving terminal ends of the loops, associated with the remaining channels (SEND CARR knob on SP), will run open. This occurs at both ends of the carrier line. When the SEND LEVEL knob is on HIGH, the power output from each channel into the line is approximately 1 milliwatt into 600 ohms, and when it is on LOW, the output is approximately 10 db below 1 milliwatt.

d. OSCILLATOR TEST FEATURE. The jack marked OSC OUT is for the purpose of measuring the output of the channel oscillator. To measure this output, turn the SEND CARR key to MK. This shortcircuits resistor R35 and makes the contacts of the SEND relay ineffective, so that the oscillator output is not short-

circuited even though the SEND relay is on its S contact. When the METER cord is connected to the OSC OUT jack, the meter indicates the output of the oscillator. For this test turn the METER knob to OSC TEST, to connect the cord to the a-c terminals of the meter.

43. Receiving Circuit

a. GENERAL. A simplified diagram of a channel-receiving circuit is shown in the upper portion of figure 30. Its principal components are:

(1) Line coil T4.

(2) Band-pass receiving filter, one side of which is grounded.

(3) Input transformer T1, which steps up the voltage and serves to isolate the rest of the circuit from the ground on the line coil.

(4) Input switch REC INPUT to regulate (by hand) the sensitivity of the detector amplifier.

(5) Amplifier tube V1 (VT–116, 6SJ7), operated with a variable bias.

(6) Amplifier tube V2 (VT–116, 6SJ7), operated with fixed bias, which serves as a simple amplifier.

(7) Output transformer T2, which couples the output of tube V2 to varistor RV1.

(8) Copper-oxide bridge rectifier RV1, called a varistor, which rectifies the amplified carrier pulses.

(9) Tube V3 (VT–116, 6SJ7), whose function is to generate a variable controlling bias which is fed back to the grid of tube V1.

(10) Tube V4 (VT–116, 6SJ7), whose function is to amplify the d-c pulses produced by the copper-oxide rectifier.

(11) Capacitor-resistor network, in which the regulating bias is produced. This network consists of resistors R14, R15, R16, and capacitors C1, C2, C4, C5, C6, and C8.

(12) Polar relay REC, actuated by plate current from tube V4, according to the signals received.

b. AMPLIFIER DETECTOR. (1) The modulated carrier currents received from the line pass through the shielded and balanced line coil to the receiving filters of all channels. The receiving filter of any channel presents a high attenuation to all frequencies except those near the midband frequency of the filter. (See figs. 28 and 29.) Each incoming modulated carrier signal is therefore directed by the filters into a separate receiving circuit. The incoming carrier signals from the receiving filter are amplified by a two-stage amplifier. The first stage contains a tube operated with a variable bias, which enables the gain of the amplifier to be varied. The amplified carrier signals are then rectified by a full-wave copper-oxide rectifier, and then passed through a third stage operated as a d-c amplifier. This produces a nearly square wave to operate the REC relay, which in turn repeats the signals to the loop circuit. Automatic-gain-control voltage is provided by a diode connected to the copper-oxide rectifier output.

(2) The voltage of the incoming carrier marking signal from the receiving filter is increased in transformer T1, and then applied to a potentiometer made up of resistors R1 to R7. The REC INPUT switch is used to select points along this group of resistors to control the magnitude of the carrier-signal voltage applied to the grid of tube V1. For any setting of this switch, keep the output voltage of tube V1 fairly constant by the level-controlling grid bias appearing across capacitors C1 and C2. (See *c* below.) Tube V1 is operated at a low screen potential to increase the sensitivity of the variable gain characteristic. Resistor R57 and capacitor C3 filter the plate voltage supplied to tube V1. The output voltage of tube V1 appears across resistor R12 and is coupled to the grid of tube V2 by means of capacitor C7 and resistor R13. Resistors R58, R59, and R60 form a voltage divider across the 130-volt plate supply in order to provide bias voltages for tubes V2, V3, and V4, and for the REC relay biasing winding. Cathode bias for tube V2 is obtained from the voltage drop across the 110-ohm part of resistor R58. Tube V2 raises the voltage of the carrier signals to a suitable value for rectification. Output transformer T2 couples the output of tube V2 to varistor RV1. The full-wave rectified carrier-signal voltage appears across resistor R16, shunted by capacitor C8, which filters out the carrier frequency but not the telegraph signal frequency. The voltage appearing across resistor R16 is applied to the grid of tube V4 through resistor R17, and to the grid, screen, plate, and screen suppressor or tube V3. These are all connected

to provide a diode-connected tube. The cathode bias of tube V3 is obtained from the voltage drop across resistors R58 and R59, and the cathode bias of tube V4 is obtained from the voltage drop across resistor R58 and the 100-ohm part of resistor R59. The cathode bias voltage of tube V3 is at a higher positive potential than that of tube V4. Resistor R17 prevents any excessive grid current from flowing in tube V4. The plate current of tube V4 operates the receiving polar relay REC to its marking contact. The plate current is approximately 6 milliamperes through winding 6–3 of the relay, while the biasing current flowing in winding 7–2 is approximately 0.3 milliampere. When no carrier signal is being received, tube V4 is cut off by its cathode bias dropping the plate current to 0, while the bias current in winding 7–2 increases to approximately 6 milliamperes to operate the REC relay to its spacing contact. Capacitor C9 further filters the carrier frequency from the signals operating the REC relay.

c. LEVEL-COMPENSATING FEATURE. The purpose of tube V3 is to provide an automatic gain or level control for the receiving circuit. The tube is connected as a diode, and the combined plate (plate plus grids) is connected to the output of the full-wave varistor RV1. The cathode bias of tube V3 is sufficiently high to keep the tube cut off except when the plate potential is high enough to cause plate current to flow. If the level of the incoming carrier is such that the plate potential becomes higher than the cathode bias, the tube will draw plate current, and a voltage will be developed across resistor R15 and capacitors C4 and C5. This voltage will also be applied to capacitors C1 and C2 through resistor R14, placing a negative voltage on the control grid of tube V1 which immediately reduces the gain of this amplifier stage of the circuit. As a result, the average voltage of the plate of tube V3 is held during marking intervals to a value near zero with respect to the cathode, unless the carrier current being received is not of sufficient level to raise the plate voltage to zero with the amplifier at maximum gain. The voltage drop across resistor R15, which supplies the control bias on tube V1, also increases the grid bias of tube V4. Since the changes in control voltage drop across resistor R15 are small compared to the total bias on tube V4, the resulting effect of this bias on the output of tube V4 is negligible. Resistor R14 prevents the control voltage across capacitors C1 and C2 from changing rapidly. Momentary increases in input level to the detector circuit are thus prevented from changing the gain of the amplifier stages appreciably. Capacitor C6 enables the circuit to regain its normal operating condition quickly after the circuit has been in a spacing condition for a long period of time.

d. REC INPUT SWITCH. (1) The REC INPUT switch provides 5-db steps between point 2 and point 8, with point 8 the step for maximum gain of the receiving circuit. The REC INPUT step should be set at the point indicated, as follows:

Level of incoming carrier measured at line coil (dbm)	Set REC INPUT knob to step
+ 5	2
0	3
− 5	4
−10	5
−15	6
−20	7
−25	8

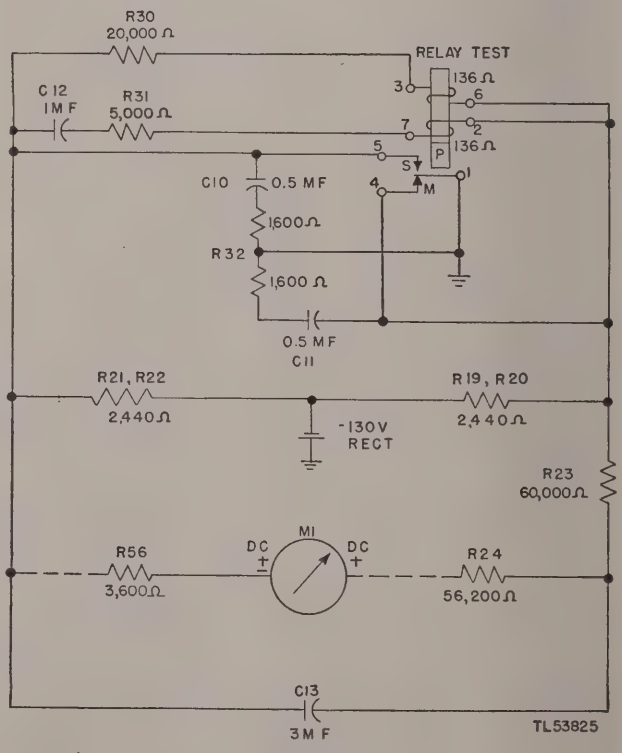

Figure 31. Vibrating circuit for testing polar relays, functional diagram.

When operation is over a channel of Telephone Terminal CF–1–(*) (Carrier), and the telegraph terminals are at the same locations of the telephone terminals, the incoming level is approximately —16 dbm and therefore the REC INPUT knob should be set as step 6.

(2) Three other positions are provided on the REC INPUT switch; one for testing the sensitivity of the receiving circuit, a second, for providing a carrier level to operate the REC relay to its marking contact, and a third, for short-circuiting the receiving circuit to operate the REC relay to its spacing contact.

(3) The TEST position of the REC INPUT knob provides a source of carrier current from the local channel oscillator at a low level. This level of carrier input is sufficient to cause an indication of 30 or more on the meter when the meter is connected to the RECEIVER CURRENT jack, if the receiving circuit has sufficient gain to provide optimum compensation for varying line levels. Failure to obtain this reading is an indication that the receiving tubes should be checked.

44. Polar Relays

The SEND, BK, and REC relays are identical. The two windings of approximately 136 ohms on each relay have the same number of turns and exert the same magnetizing effect for a given value of current on the relay magnetic circuit. Thus, if the current flowing in one winding of a relay is equal to the current flowing in the other winding, but opposite in direction of flow, the magnetizing effects will be neutralized and no operation will take place. The arrangement of winding terminals is such that if positive potential is applied to a lower numbered terminal, namely 2 or 3, and negative to the corresponding higher numbered terminal, 7 or 6, the armature will operate to the marking or right-hand (No. 4) contact as viewed from the front of the relay. If the potentials are reversed, positive to the higher numbered terminals and negative to the lower, the relay armature operates to the spacing or left-hand (No. 5) contact. This relay is sensitive and will operate on a current of approximately 1.2 milliamperes in one winding, or on a difference of current of 1.2 milliamperes if the two currents flow through the windings in opposite directions.

45. Relay Testing Circuit

a. A test circuit is provided for testing and readjusting polar relays. This circuit (fig. 50) is arranged to check the electrical bias and the operating sensitivity of the relay. With the relay inserted in the connecting block of the test circuit, the armature of the relay may be caused to vibrate at approximately 20 cycles per second. A meter circuit connected to the contacts of the relay indicates the difference in time intervals during which the relay armature is held to the marking and spacing contacts. The operating sensitivity of the relay is tested by applying a reverse current to the relay and then applying two values of currents. One current value should operate the relay and the other should not.

b. With lever A of the RELAY TEST keys thrown to BIAS, the relay armature is made to vibrate by means of the circuit. (See fig. 31.) when the relay armature touches contact S, a current flows from ground to charge capacitor C12 through resistor R31, winding 7–2 of the relay under test, resistors R19 and R20, and the —130-volt rectifier to ground. This current is in the direction to hold the armature on contact S. Current also flows through resistor R30 and winding 3–6 of the relay, in such a direction as to tend to operate the armature to contact M. As soon as capacitor C12 becomes sufficiently charged, the current in winding 7–2 decreases to such a value that the current in winding 3–6 controls the relay operation and moves the armature to contact M. When the armature touches contact M, a current flows from ground to charge capacitor C12 in the reverse direction, through winding 2–7 of the relay, resistor R31, resistors R21 and R22, and the —130-volt rectifier to ground. This current is in the direction to hold the armature to contact M. Current also flows throug winding 6–3 of the relay and resistor R30 in a direction to operate the relay armature to contact S. The charging current to capacitor C12 decreases, as before, to a point where the current in winding 3–6 assumes control and operates the armature to contact S. This cycle of operations is repeated approximately 20 times a second. The meter provided for all measurements is connected to the relay test circuit by inserting the METER cord into the RELAY TEST jack. When RELAY TEST key A is

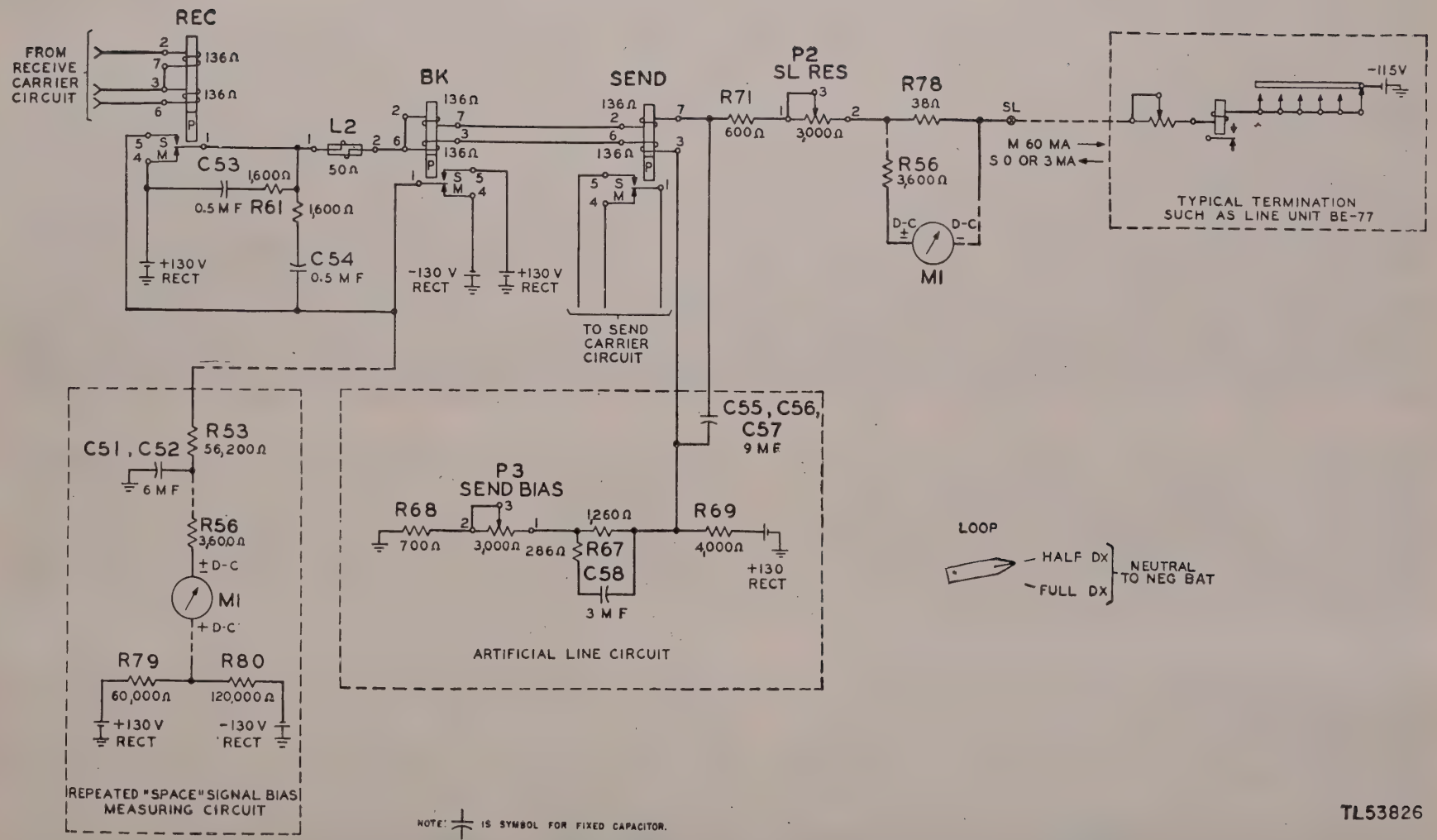

Figure 32. Functional diagram of neutral loop, half-duplex negative battery at station.

thrown to the BIAS position, the meter is connected between contacts M and S of the relay, so that if the armature is held to contact M for a longer period than it is held to contact S, the meter indicates to the right of 0 the percent marking bias. If the reverse condition is true, the meter will indicate to the left of 0 the percent spacing bias.

c. To test the sensitivity of operation of the relay, *soak, operate,* and *nonoperate* values of current are furnished to the two relay windings, connected series aiding. For these tests throw lever A of the RELAY TEST group to SENSITIVITY. To check the operation of the relay armature from the spacing to the marking contact, throw lever B to MARK, causing a soak current of 5.2 milliamperes to flow through the two windings to operate the armature to contact S. The closing of the contact is indicated by a meter reading of approximately 100 to the left of 0. Operating lever C to OPR removes the soak current and applies an operating current of 0.72 milliampere to operate the armature to contact M. If the relay is in adjustment, this operation is indicated by a change in the meter reading from approximately 100 to the left to approximately 100 to the right of 0. When lever C is restored to its midposition, the soak current is again applied and the meter indicates approximately 100 to the left of 0. Operating lever C to NON-OPR removes the soak current and applies a current of 0.26 milliampere which tends to operate the relay to contact M. If the relay is in adjustment, the armature remains on contact S, as indicated by a continued meter reading of approximately 100 to the left of 0.

d. To check the operation of the relay armature from the marking to the spacing contact, throw lever B to SPACE. Then repeat the procedure just described. The meter readings should be opposite to those noted for the test of spacing contact to marking contact operation.

46. Loop Circuits, General

a. Teletypewriters are connected to the d-c loop circuits of the telegraph terminal through line units, telegraph switchboards, or repeaters. These various types of loop equipment require different d-c circuit terminations. Each channel contains a LOOP switch for switching in the proper termination to operate with the equipment used at the end of the loop.

b. Lining up the loop circuits requires the measurement of send bias and loop currents. One common meter is provided for all measurements connected as follows:

(1) To measure the current in the sending loop, insert the plug of the METER cord into the SL CURRENT jack. The meter indicates the amount of current in milliamperes.

(2) To measure the current in the receiving loop, insert the plug of the METER cord into the RL CURRENT jack. The meter indicates the amount of current in milliamperes.

(3) When the plug of the METER cord is inserted into the SEND BIAS jack, the meter indicates the send bias, which can be adjusted to the required amount by turning the SEND BIAS knob.

47. LOOP Knob on NEUTRAL TO NEG BAT-HALF DX (fig. 32)

a. When the LOOP knob is set on this position and terminating battery is furnished at the station, the channel terminal is arranged for half-duplex transmission. Sending and receiving transmission to and from the station is over a single wire or simplexed line, terminated at the station in a negative polarity. A typical loop condition is that for operation to Line Unit BE–77 or BE–77–(*), connected to a local —115-volt rectifier. The line to the station is connected to binding post SL of the channel terminal.

b. With the REC relay operated to its contact M and the power connected at the station, the loop current is adjusted to 60 milliamperes by means of the rheostat at the channel terminal and the rheostat at the station equipment. To reduce internal heating in the teletypewriter switchboard, keep the resistance at the station at the minimum value consistent with providing 60 milliamperes loop current.

c. The 60-milliampere loop current flowing through winding 2–7 of the BK and SEND relays holds the relay armatures to their M contacts. The current flowing in winding 3–6 of the relays is approximately 30 milliamperes, in a direction to operate the relay armatures to their S contacts. Since the current in the 2–7 or line winding is twice as great as the current

in the 3–6 or artificial-line winding, the armatures are held to their M contacts.

d. If the operator at the station opens the loop circuit, the loop current decreases to zero and the current in winding 3–6 operates the BK and SEND relays to their S contacts. When signals originating at the station open and close the loop circuit, the BK and SEND relays repeat these signals. The SEND relay repeats the signals to the modulating circuit for transmission of a-c signals over the carrier telegraph circuit, while the BK relay repeats the signals to the bias-measuring circuit.

e. Transmission to the station is accomplished through the REC relay which receives signals from the carrier telegraph circuit and repeats them to the loop circuit. When the REC relay operates to contact S, the polarity of the telegraph voltage applied to the line is the same as the polarity of the rectifier or battery at the station. Since the polarities are opposing and the voltages differ slightly, the loop current decreases to approximately 3 milliamperes in the direction opposite to that of the marking loop current. The current in the artificial-line windings reverses direction and is of sufficient magnitude to hold the armatures of the BK and SEND relays to their M contacts. When the REC relay armature returns to contact M, the loop current again becomes 60 milliamperes and the current in the artificial-line windings is restored to 30 milliamperes in its original direction of flow.

f. The artificial line is a network arranged to approximate the impedance of the real line throughout the range of frequencies involved in the transmission of d-c telegraph signals. When transmission is from the REC relay to the loop circuit, the transient parts of the signals transmitted to the line are approximately duplicated in the artificial-line windings of the BK and SEND relays, and therefore the relays do not leave their M contacts.

g. The SEND BIAS potentiometer is provided to adjust the current through the artificial-line windings of the BK and SEND relays to the value which gives best signal reception from the station. The value of the current through the artificial-line windings for any line condition is adjusted by turning the SEND BIAS knob while the operator at the station sends repeated space signals by holding the printer space bar operated. A bias-measuring circuit is connected to the armature of the BK relay. The constants of this bias-measuring circuit are such that the meter reads 0 when a repeated space signal is being repeated without bias by the BK relay. Since the BK and SEND relays are operated by the same circuit, the SEND relay also transmits approximately unbiased signals to the carrier line.

h. Capacitors C55, C56, and C57, which are also part of the artificial-line circuit, are effective in preventing false momentary operations of the BK and SEND relays when the REC relay is transmitting to the loop.

i. The BK relay performs the following additional functions in this type of operation (half-duplex). When the receiving operator wishes to gain control of the circuit during reception of signals, the operator opens the loop circuit. This is called *breaking*. Opening the loop at the receiving station causes the BK and SEND relays to operate to their S contacts because of the current in the artificial-line windings of the relays. In a half-duplex connection, the BK relay controls the polarity of the battery connected to contact S of the REC relay. When the BK relay is operated to contact S, the polarity of contacts M and S of the REC relay is the same. Therefore, signals that are being repeated by the REC relay will not reverse the current in the artificial-line windings of the BK and SEND relays. The SEND relay, therefore, continues to send a break (or spacing) signal to the carrier-telegraph circuit as long as the operator originating the break signal continues to keep the loop circuit open. Where the repeated space signal is used for breaking the sending station, the break becomes evident by repeated errors in the home copy of the message being transmitted.

j. Retardation coil L2 reduces interference into the telephone circuit caused by telegraph signals when the telegraph loop consists of a simplexed pair of a telephone circuit.

48. LOOP Knob on NEUTRAL TO NEG BAT-FULL DX (fig 33)

a. When the LOOP knob is set to this position, the channel terminal is arranged for full-duplex transmission, and transmission to the station is over two separate wires, or simplexed lines, each terminated in negative polarity. A

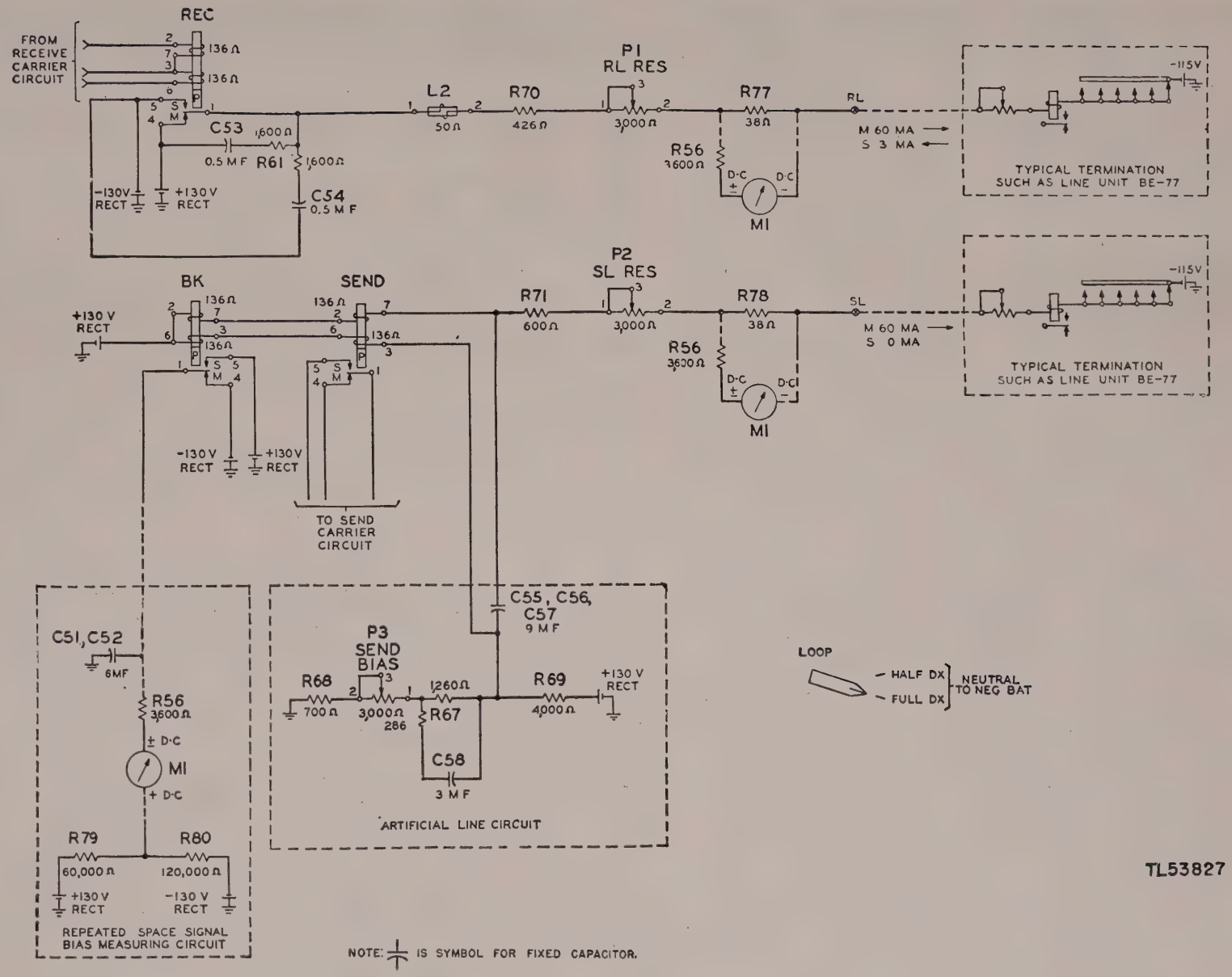

Figure 33. Functional diagram of neutral loop, full-duplex negative battery at station.

typical arrangement is that for operation to two Line Units BE–77–(*), each connected to a local —115-volt rectifier. The wire to the sending Line Unit BE–77–(*) is connected to binding post SL, and the wire to the receiving Line Unit BE–77–(*) is connected to binding post RL of the channel terminal.

b. With the REC relay operated to contact M, and with power connected at the station, the loop currents are adjusted to 60 milliamperes in each loop by adjustment of the rheostat at the channel terminal and the rheostat at the station equipment.

c. For the sending loop keep the resistance at the sending station at the maximum value consistent with providing 60 milliamperes loop current. With maximum resistance at the sending station turn the SL RES knob until the meter indicates 60. If the loop current cannot be completely adjusted at the channel terminal, the operator at the station should complete the adjustment.

d. Keep the resistance in the receiving loop at the station at the minimum value consistent with providing 60 milliamperes loop current. With the minimum resistance at the receiving station, turn the RL RES knob until the meter indicates 60. If the loop current cannot be completely adjusted at the channel terminal, the station operator should complete the loop current adjustment.

e. The operation of the BK and SEND relays for signals sent from the station, and the adjustment of the sending bias, are the same as for half-duplex operation to a station terminated in a negative polarity. (See par. 47.)

f. Signals received from the carrier-telegraph circuit are repeated into the receiving loop by the REC relay. When the REC relay operates to contact S, the voltage applied to the loop is of the same polarity as that of the rectifier or battery at the station, but it is a slightly higher voltage. Therefore the loop current decreases to approximately 3 milliamperes in the direction opposite to that of the marking current. When the REC relay operates to contact M, the loop current again becomes 60 milliamperes.

49. LOOP Knob on NEUTRAL TO POS BAT-HALF DX (fig. 34)

Operation under this condition is identical with that for NEUTRAL TO NEG BAT-HALF DX (par. 47), except for those changes in the circuit conditions necessitated by the use of positive instead of negative rectifier or battery at the station. Loop currents are reversed in direction as compared with the negative battery termination. The polarities of the voltages connected to contacts M and S of the REC relay are reversed, and the line and artificial-line windings of the BK and SEND relays are interchanged.

50. LOOP Knob on NEUTRAL TO POS BAT-FULL DX (fig. 35)

Operation under this condition is identical with that for NEUTRAL TO NEG BAT-FULL DX (par. 48), with the exception of changes in the circuit conditions necessary because of the use of positive instead of negative rectifier or battery at the station. (See par. 49.) Loop currents are in opposite direction to those of the negative battery termination.

51. LOOP Knob on POLARENTIAL-HALF DX (fig 36)

a. With the LOOP knob set on this position, the channel terminal is arranged for half-duplex transmission, and sending transmission and receiving transmission are over a single wire or simplexed line to a station terminated in ground for marking and +115 volts for spacing. Transmission from the channel terminal is on a polar basis to ground at the station. A potentiometer, made up of resistors R73 and R74, reduces the voltage applied to the loop to approximately 75 volts. The line current for this condition is adjusted by turning the SL RES knob until the meter indicates 30.

b. When the REC relay is on contact M, the 30-milliampere loop current through windings 3–6 of the BK and SEND relays is in a direction to operate the relays to their S contacts. However, the current in windings 2–7 of the same relays is 47.5 milliamperes, in the direction to hold these relays to their M contacts. When the REC relay is on its contact S, the 30-milliampere loop current in windings 3–6 of the BK and SEND relays is in the direction to hold their armatures more firmly on their M contacts. Consequently the REC relay operates the relay at the station on a polar basis and the BK and SEND relays remain operated to mark.

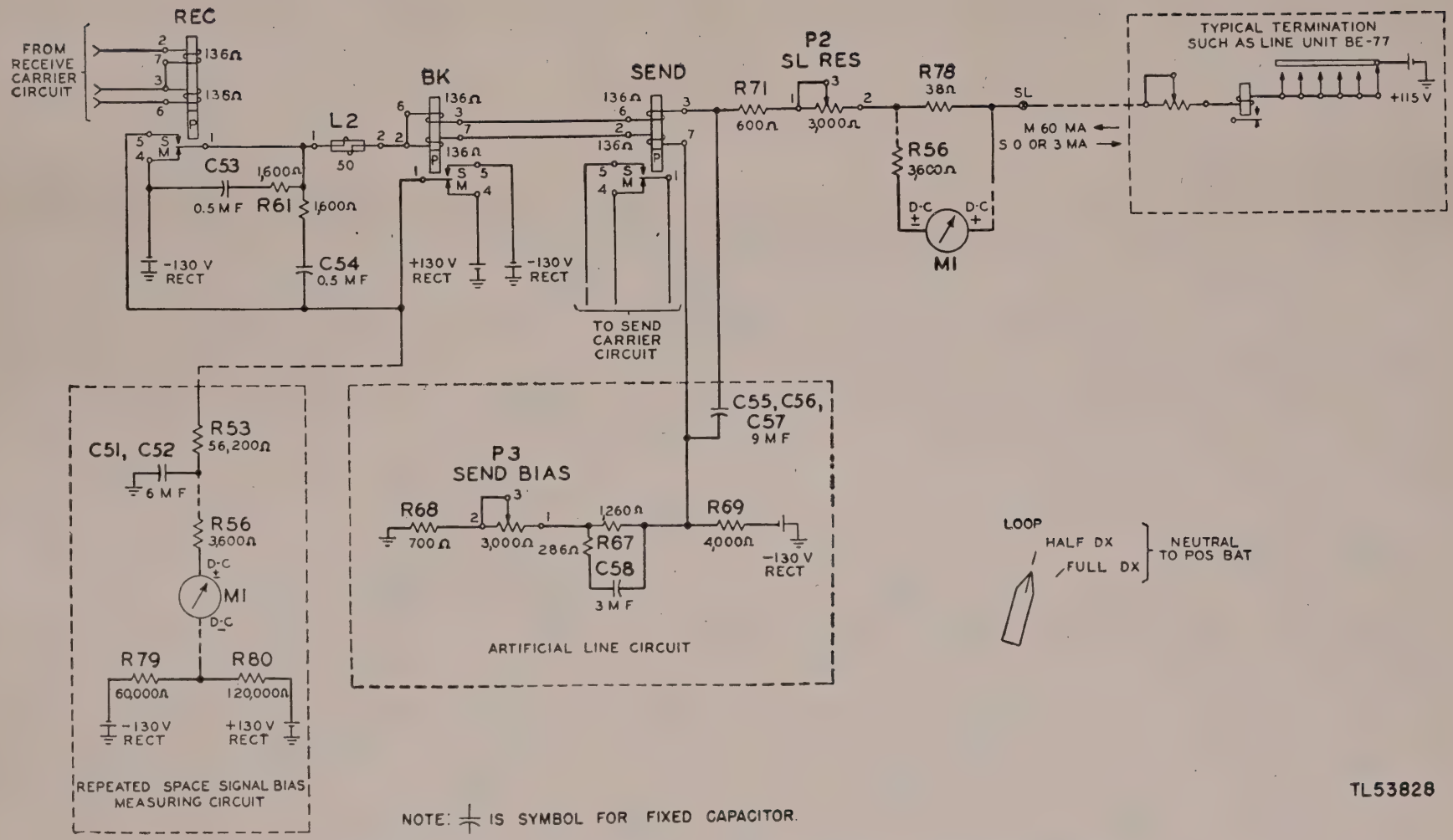

Figure 34. Functional diagram of neutral loop, half-duplex, positive battery at station.

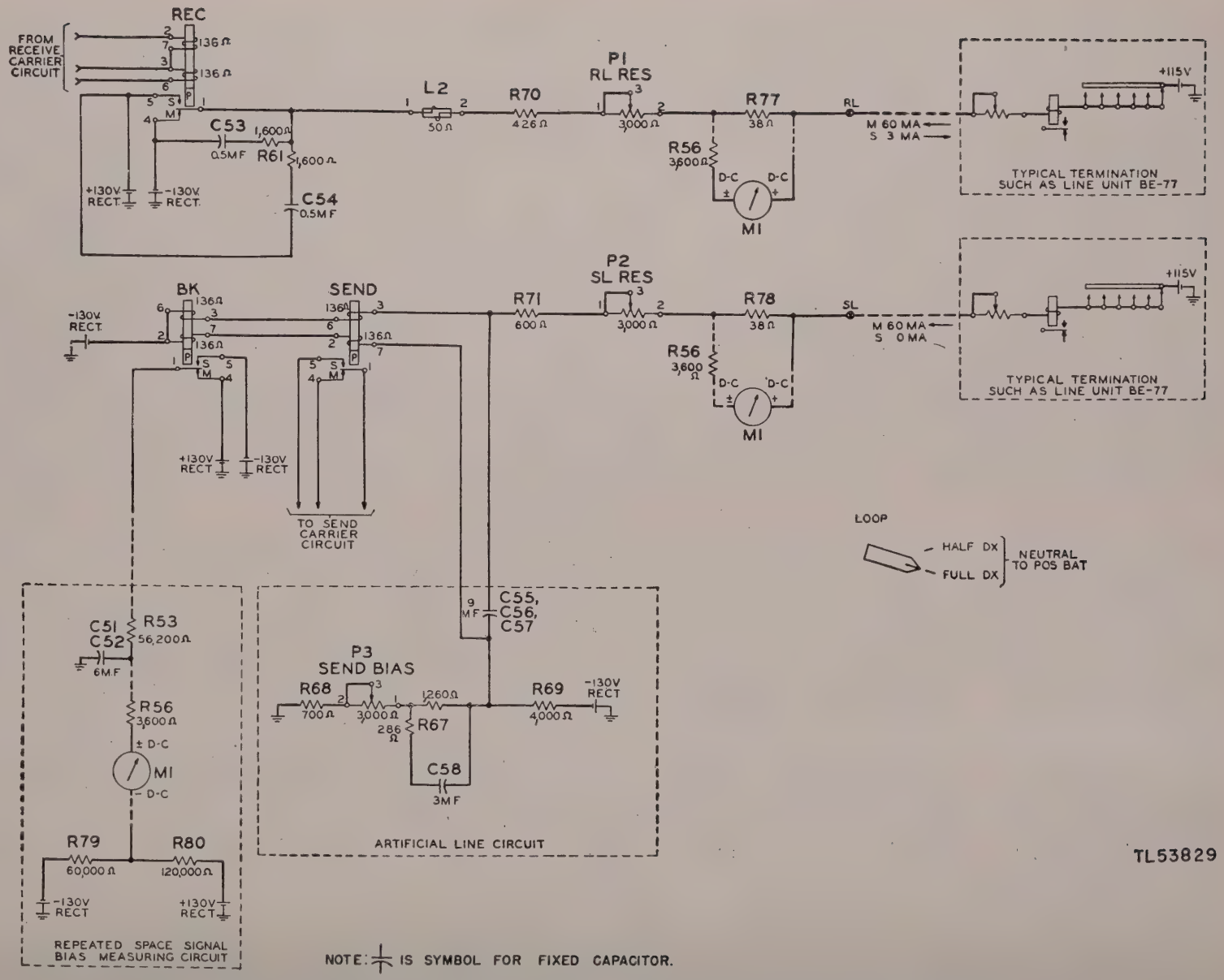

Figure 35. Functional diagram of neutral loop, full-duplex positive battery at station.

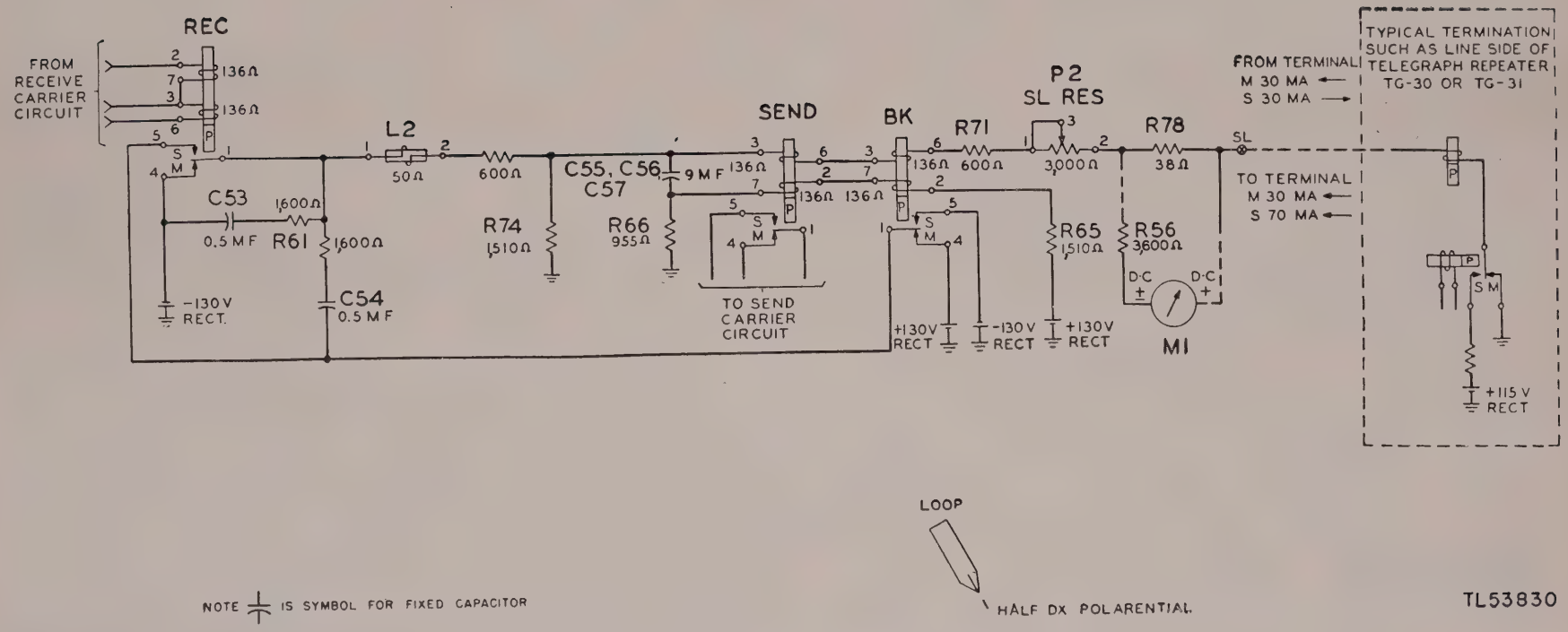

Figure 36 Functional diagram of polarential loop, half-duplex:

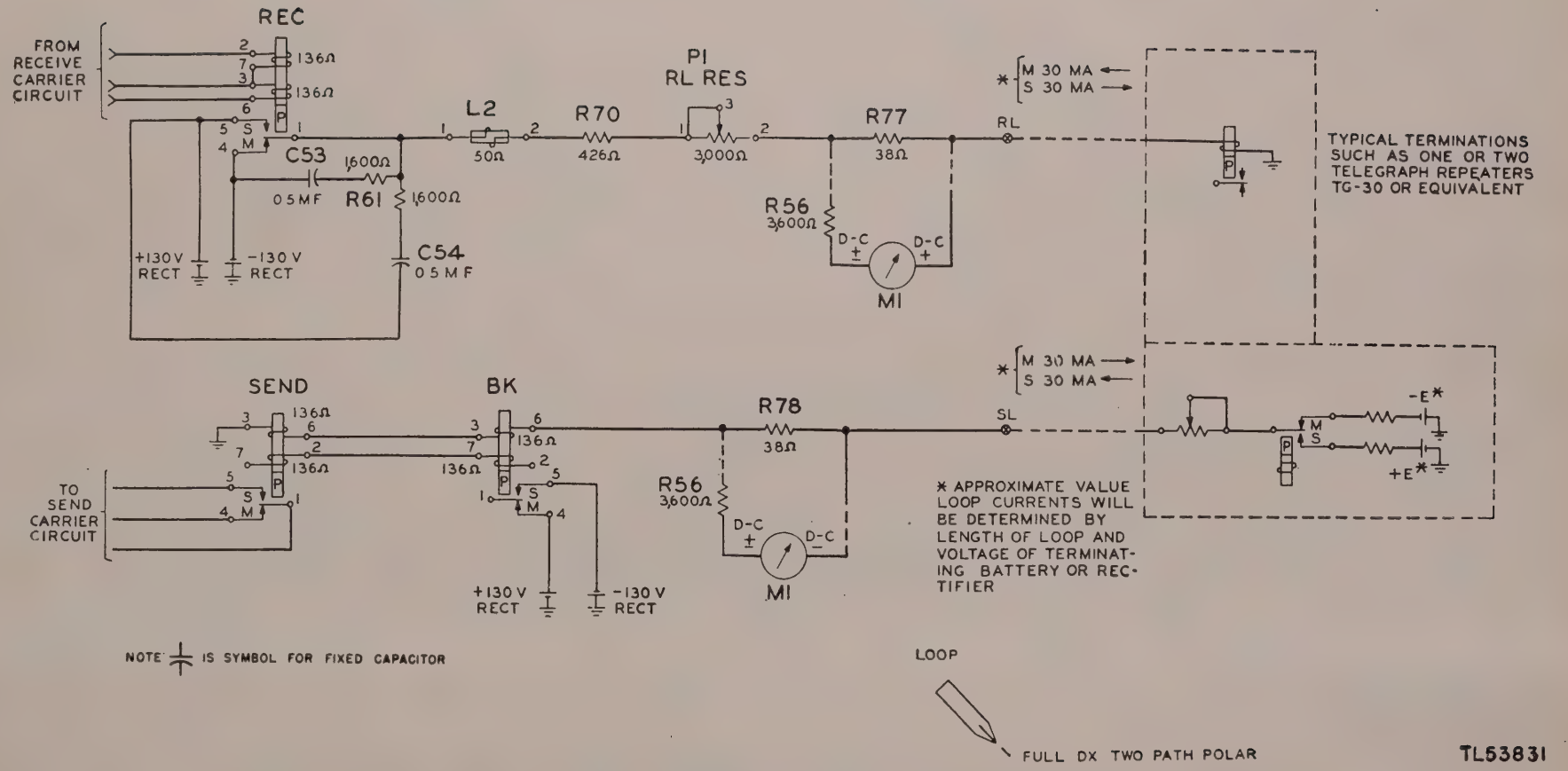

Figure 37. Functional diagram of two-path polar loop, full-duplex.

c. When transmission is from the station to the channel terminal, the loop is terminated in ground during marking intervals and in +115 volts during spacing intervals. The voltage applied to the loop during the spacing interval is in a direction to aid the marking voltage at the channel terminal, and increases the loop current to approximately 70 milliamperes. This high current operates the BK and SEND relays to their S contacts to transmit the spacing signal to the carrier telegraph circuit. Application of ground during the marking interval operates the SEND and BK relays to their M contacts. With this type of transmission, leakage paths along the loop, such as occur when it is wet, will increase the marking current and decrease the spacing current when transmission is from the station. The increase in marking current and decrease in spacing current under leakage conditions are of approximately equal magnitude, providing for transmission of unbiased signals by the BK and SEND relays for all usual values of leakage.

d. Polarential operation is used when operating to the line side of telegraph Repeater TG–30 or telegraph Repeater TG–31.

52. LOOP Knob on TWO-PATH POLAR-FULL DX (fig. 37)

a. With the LOOP knob set on this position, the channel terminal is arranged for full-duplex transmission on a two-path polar basis. Signals from the channel terminal are transmitted to the station by the REC relay on a polar basis. The loop current is adjusted to as nearly 30 milliamperes as possible by turning the RL RES knob.

b. Transmission from the station to the channel terminal is also on a polar basis. Polar signals operate the BK and SEND relays to transmit signals to the carrier telegraph circuit. The adjustment of the current is under the control of the station. This current may be from 10 to 50 milliamperes, depending upon the voltage of the sending batteries or rectifiers and upon the length of the loop.

c. Transmission of two-path polar signals occurs when operation is to loop equipment under the conditions listed for this loop knob position in table V. When the channel terminal is connected to one telegraph Repeater TG–30 (Terminal) with its LINE switch in the TWO-PATH POLAR position, there is only one teletypewriter connected to Repeater TG–30. Operation over the channel is on a half-duplex basis.

53. LOOP Knob on NEUTRAL TO POS (OR NEG) BAT-HALF DX (Metallic)

a. Operation under these conditions (figs. 38 and 39) provides transmission on a half-duplex basis. It is the same as half-duplex operation with the LOOP knob on NEUTRAL TO NEG BAT-HALF DX (par. 47), or on NEUTRAL TO POS BAT-HALF DX (par. 49), except that the terminating battery is furnished at binding post RL of the telegraph terminal. For this condition the RL RES knob is turned to the middle of its rotation range and the loop current is adjusted to 60 milliamperes by turning the SL RES knob until the meter indicates 60.

b. When the LOOP knob is on NEUTRAL TO NEG BAT-HALF DX, operation to the loop side of telegraph Repeater TG–30 on a local basis is possible.

54. Tandem Connection of Two Telegraph Terminals

A channel terminal associated with a bay of one system may be connected on the d-c loop side to a channel terminal of a bay of either Telegraph Terminal CF–2–A (Carrier) or Telegraph Terminal CF–2–B (Carrier) of another system. This connection provides for service between two stations, each associated with a different system. It is called a tandem connection and operation over such a connection is called through operation. Usually the telegraph terminals connected in this way are at the same location, which is called the junction point. The operation on a tandem connection may be either on a half-duplex or full-duplex basis. If the operation is on a half-duplex basis, the terminals at the junction point may be connected directly or through Line Unit BE–77–(*). These three possible through connections and the positions to which the LOOP knobs are set on the two bays are shown in figure 40. The Loop knob of one terminal is turned to NEUTRAL TO POS BAT and that of the other to NEUTRAL TO NEG BAT, which provides for neutral operation between the two channel ter-

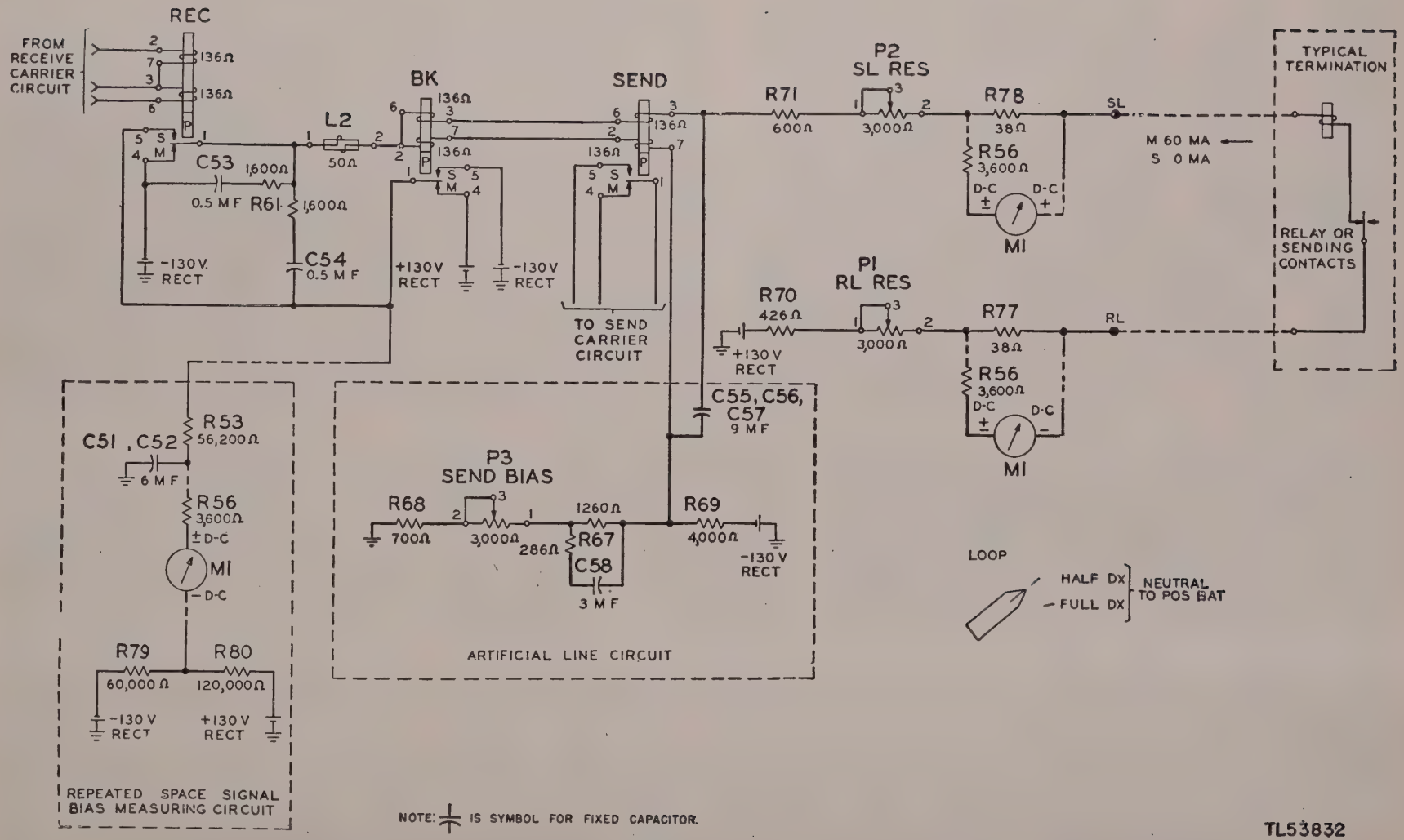

Figure 38. Functional diagram of neutral loop, half-duplex, no battery at station, positive terminating battery furnished at telegraph terminal

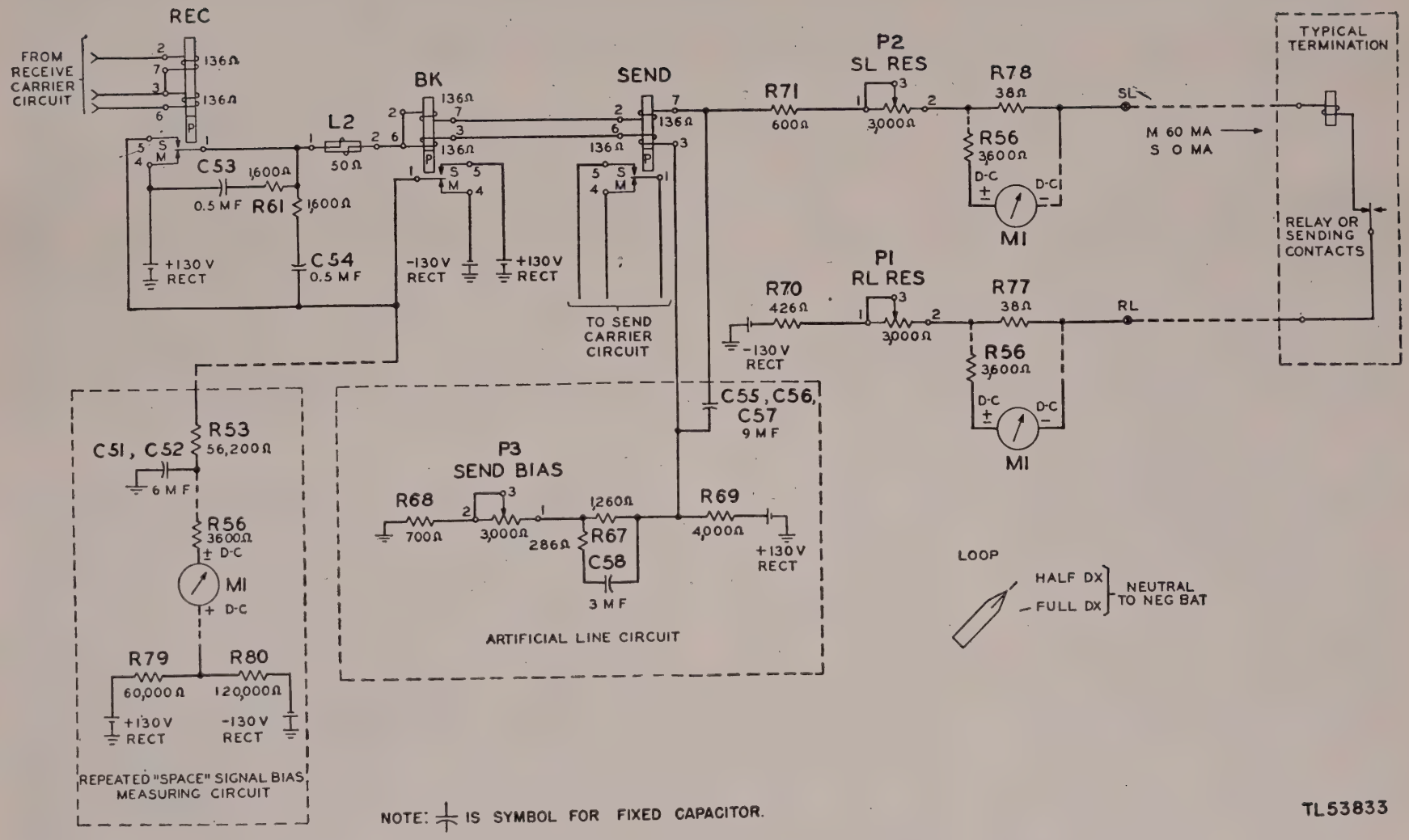

Figure 39. Functional diagram of neutral loop, half-duplex, no battery at station, negative terminating battery furnished at telegraph terminal.

minals. The channel terminal circuit of one system, on receiving telegraph signals sent from the channel at the distant end of the associated carrier line, transmits these signals to the channel terminal of the other system. The signals are then sent over the second carrier line to the station connected to the particular channel used in the latter system. The operation between the two channel terminals, connected in tandem, is the same as that already described for neutral operation from a station to the telegraph terminal. If a message is sent from the teletypewriter associated with a line unit in the tandem connection, it will be transmitted to both stations associated with the tandem connection.

55. Monitoring Features (figs. 41 and 42)

a. Means are provided in each channel terminal circuit for using a teletypewriter for sending to, and receiving from, the equipment at the end of the loop or the distant telegraph terminal. A line unit is not needed for connecting the teletypewriter to the channel terminal circuit. The use of a teletypewriter for communicating over the loop or carrier line is referred to as monitoring.

b. Each channel terminal circuit contains two PRINTER jacks, REC-RED and SEND-BLK, and a lever-type PRINTER key marked SEND LOOP at the top and SEND CARR at the bottom. The four pairs of jacks appear in the fuse panel located at the bottom of the bay between the two rectifiers. The four keys are in a horizontal row on the loop control panel. As the jack markings indicate, the red plug of the teletypewriter cord which connects to the receiving magnet is inserted in the REC-RED jack and the black plug of the cord which connects to the sending contacts is inserted in the SEND-BLK jack. To communicate to the loop, throw the PRINTER key lever to SEND LOOP, and to communicate with the distant terminal, throw it to SEND CARR. Be careful to operate the particular PRINTER key associated with the jacks to which the printer cords are connected.

c. Receiving on the monitoring teletypewriter is not affected by the position of the PRINTER key. When the red plug of the teletypewriter cord is connected to the PRINTER REC-RED jack, the receiving magnet is connected in series with resistors R75 and R76 between the armatures of the REC and BK relays. (See figs. 41 and 42.) When transmission is from the distant terminal, the REC relay responds to the incoming signals and operates the teletypewriter magnet to provide a record of the incoming message. If there is a loop connected to the channel terminal, the teletypewriter at the end of the loop also records the message. When transmission is from the loop circuit, the BK and SEND relays follow the signals and the BK relay repeats the signals to the magnet of the monitoring teletypewriter. When receiving signals from the loop, the REC relay must be operated to its marking contact by carrier current either from the distant terminal or locally from the channel oscillator. Carrier current is supplied locally by turning the REC INPUT knob to the MK position.

d. For sending to the loop, the PRINTER key lever is thrown to the SEND LOOP position This connects the sending contacts of the monitoring teletypewriter in series with the cathode circuit of tube V4. (See fig. 41.) When transmitting from the teletypewriter, the sending contacts open and close the cathode circuit to interrupt the plate cathode current and thus operate the REC relay in a manner similar to operation by incoming signals from the distant terminal. The REC relay repeats the signals to the loop and operates the receiving magnet of the monitoring teletypewriter to provide a local copy of the message.

e. For sending to the distant telegraph terminal (fig. 42) throw the PRINTER key lever to the SEND CARR position. This operation performs two functions. It disconnects the loop from the SEND and BK relays and provides the proper termination to the loop to prevent the teletypewriter from running open. The other function of the key is to connect the sending contacts in series with resistor R63 to the —130-volt rectifier. The other side of the sending contacts is connected to a parallel circuit consisting of the SEND and BK relays connected to ground and resistor R62 connected to the +130-volt rectifier. When the sending contacts are closed, negative potential is applied to the relays to operate them to marking. When the sending contacts open, positive potential through resistor R62 operates the relays to spacing. Thus when the sending contacts open

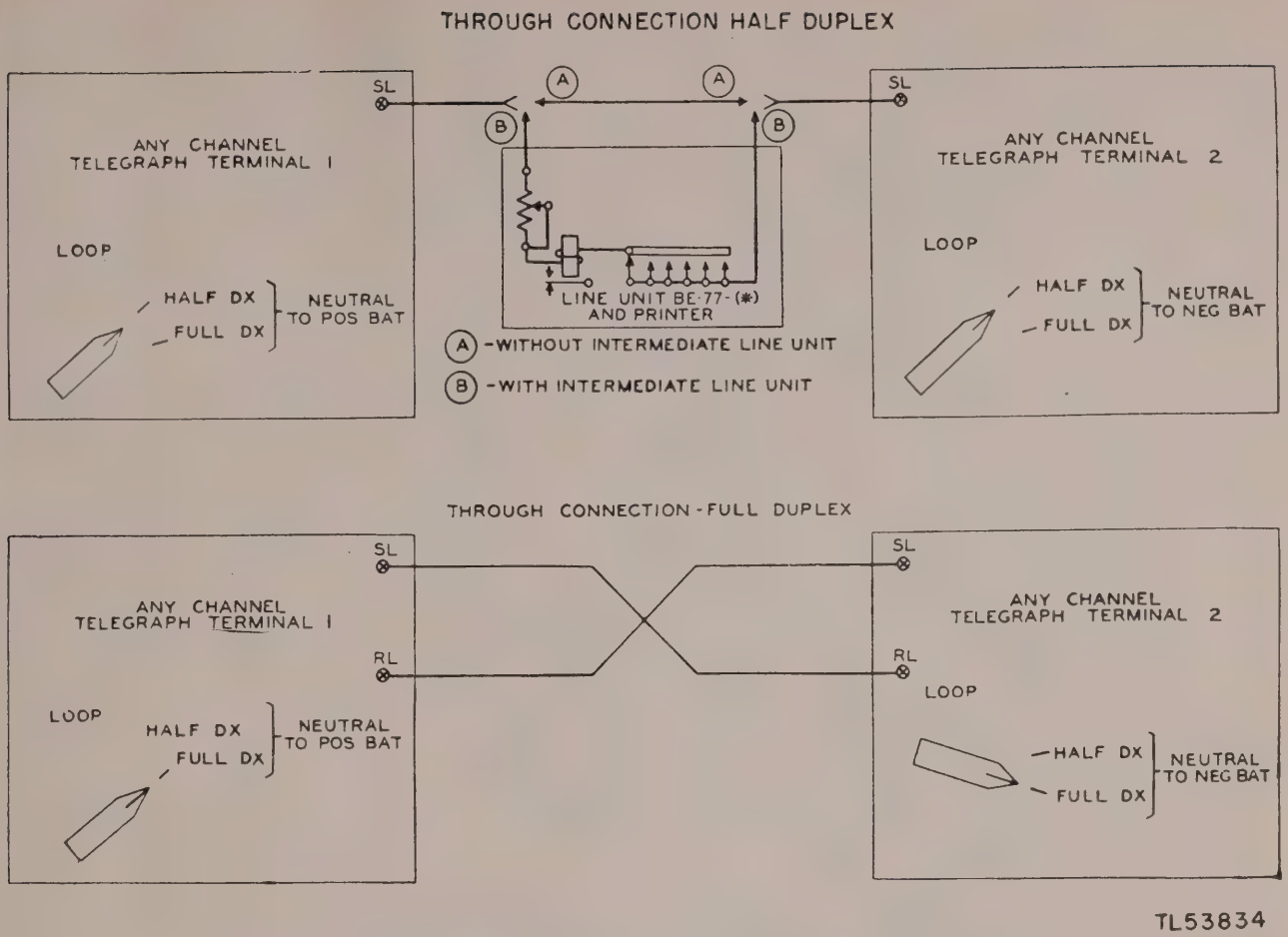

Figure 40. Functional diagram of through connections, half- and full-duplex.

and close, the SEND relay repeats the signals to the distant terminal and the BK relay repeats them to the receiving magnet to provide local copy. For sending to the distant terminal, the SEND CARR knob must be in the NORM position.

f. Disconnect the monitoring teletypewriter from the channel terminal during regular operation except when used for the following purpose. The teletypewriter magnet may be connected to the channel terminal (red plug in PRINTER REC-RED jack) under any half-duplex loop connection to provide a record of a message being sent in either direction. This arrangement is not satisfactory for full-duplex operation, as messages in two directions at the same time could not be recorded on the teletypewriter.

56. Power Supply Units

a. GENERAL. Two power rectifier units, located near the bottom of the telegraph terminal bay (fig. 2) provide the power for operating the four channel terminals associated oscillators on the bay, and the d-c loops connected to them. The upper rectifier (+TG) supplies alternating current at 6.6 volts to the filaments of the vacuum tubes of channel terminals 1 and 2 +130 volts telegraph battery to the d-c telegraph circuits of all channels, and +130 volts plate current to all vacuum tubes. The lower rectifier (—TG) supplies alternating current at 6.6 volts to the filaments of the vacuum tubes of channel terminals 3 and 4 and —130 volts telegraph battery to the d-c circuits of all four channels. The source of power should be 50–60 cycle, 103–128- or 207 to 253-volt alternating current. The rectifiers can be adapted to function on either voltage by making a change in the connections inside of the rectifier case. (See par. 13*b*.)

b. RECTIFICATION. A front view of the rectifier is shown in figure 43. Figure 44 is a functional diagram of the main features of the

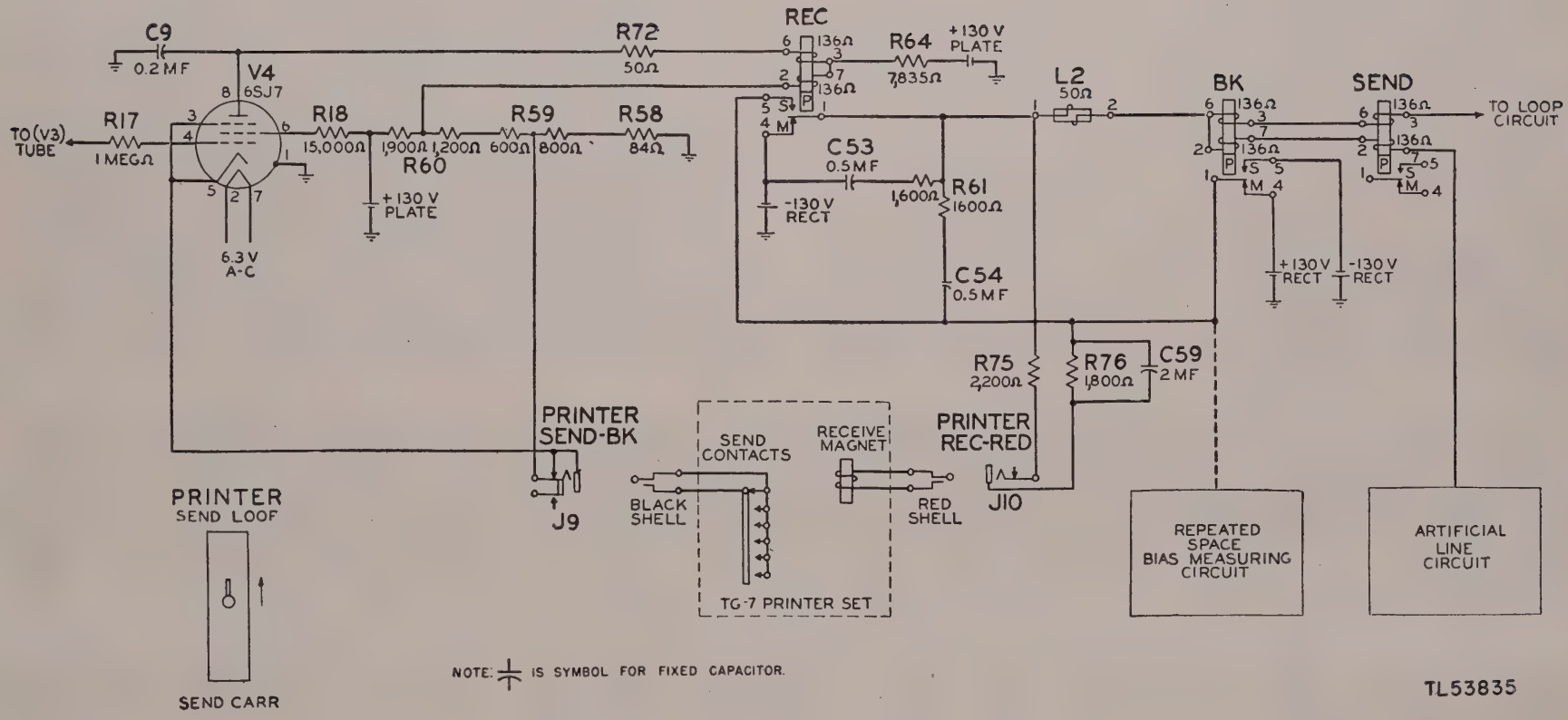

Figure 41. Functional diagram of monitoring to loop.

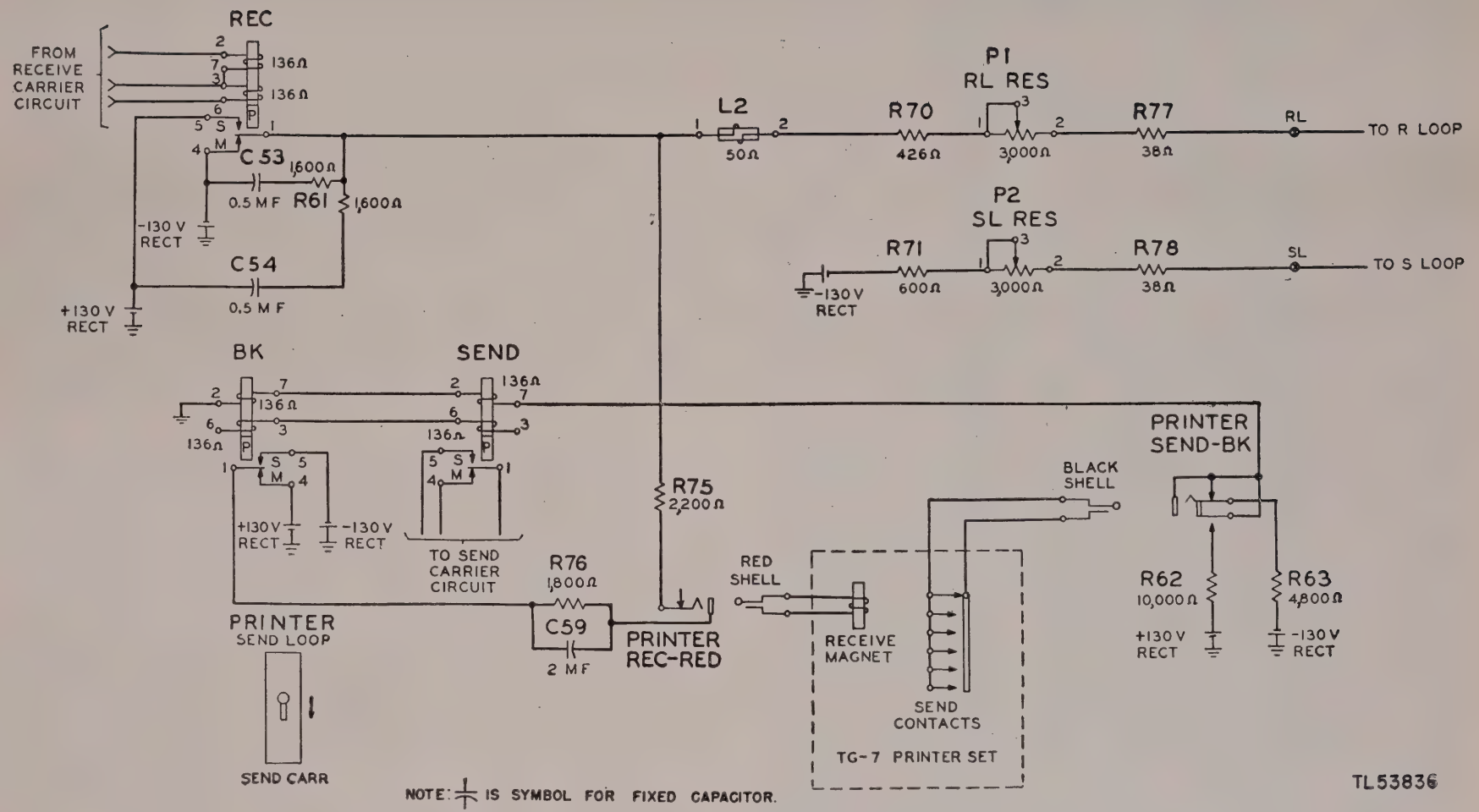

Figure 42. Functional diagram of monitoring to distant terminal.

rectifier circuit. The circuit is shown in detail in figure 51. The rectifier circuit uses two gas-filled, three-element rectifier tubes, one of which conducts during the positive half-cycle and the other during the negative half-cycle to give full-wave output. The filaments are directly heated by secondary windings 11–12 and 10–11 of transformer T1. Plate voltage is supplied from secondary windings 6–7 and 7–8 for the d-c output of 130 volts.

c. REGULATION. (1) The regulator for the d-c output is composed of three parts: A potentiometer consisting of fixed resistors A and B, and rheostat R (or +TG or −TG); a fixed bias or reference voltage circuit (*d* below); and a varistor H which furnishes line voltage compensation.

(2) Resistors A and B and rheostat R are connected across the d-c output, so that the current in them is proportional to the output voltage. Resistor A, the 2–3 section of rheostat R, the reference voltage across capacitor F, and the output of varsitor H are connected in series between the filaments and the grids of the tubes, resulting in a grid bias of about −3 volts.

(3) Rheostat R can be adjusted by trial so that the grid voltage is just negative enough to cause the tubes to fire over enough of each a-c cycle to maintain the desired voltage. When the output voltage increases, the current in resistor A and rheostat R also increases to make the grid bias more negative, which decreases the firing time and the output voltage to bring it back to the regulated value. A decrease in output voltage has the opposite effect.

(4) The output of varistor H is in the grid control circuit. (See (2) above.) Its input is connected to the 15–16 secondary coil of transformer T1 so that its supply voltage varies with changes in the applied a-c power. Its output variation is just enough to change the grid bias voltage as needed to compensate for the change in plate voltage due to line voltage variations.

(5) There is a common grid circuit for the two tubes. Resistors E and F separate the two grids and also limit the grid currents.

(6) A time delay timer TD is provided to delay firing of tubes until the filaments of the tubes have heated to operating temperature. when power is first connected to the rectifier, the tube plates are energized but the timer is closed through contact C. This omits the reference voltage circuit and connects the grids through varistor H directly to rheostat R, leaving the grid too negative for the tube to fire. When power is connected to the rectifier, a small motor in the timer starts to rotate, and after 15 seconds, operates the timer contacts to open C and close O. This switches in the reference voltage circuit and normal operation begins, as shown by a glow from the tubes and output from the rectifier.

d. REFERENCE VOLTAGE. (1) A reference voltage of constant value is required. In these rectifiers, the reference voltage is furnished by an auxiliary regulated rectifier, supplied as part of the main rectifier and connected in the grid control circuit so that its voltage opposes the voltage from the potentiometer and varistor H. The auxiliary rectifier consists of secondary winding 13–14 of transformer T1, varistors A and B connected as a full-wave rectifier, resistors D and J in series with the varistor input, and a constant voltage shunt (thermistor T in series with resistor C) across the d-c output of the auxiliary rectifier.

(2) An increase in current through thermistor T causes a decrease in the voltage drop across its terminals. The same current flowing through resistor C causes an increase in the voltage drop across its terminals. A decrease in current would have the opposite effect. Thermistor T and resistor C have been selected so that the increase in drop across one compensates for the decrease across the other, and the total voltage drop across the two in series, as well as the output voltage of the auxiliary rectifier, remains practically constant.

(3) As the current in thermistor T and resistor C changes with line voltage variation, there is a corresponding change in the current through the input resistors D and J. The resulting voltage drops across the input resistor are assisted in compensating in the auxiliary rectifier for line voltage changes and in maintaining a constant reference voltage.

e. FILTERS. (1) Retardation coils L3 and L4, with capacitors H and H1, suppress radio-frequency noise generated in the tubes. Capacitors D and E, together with the electrostatic shield in transformer T1, keep carrier-frequency and radio-frequency noise originating within the rectifier from being carried out

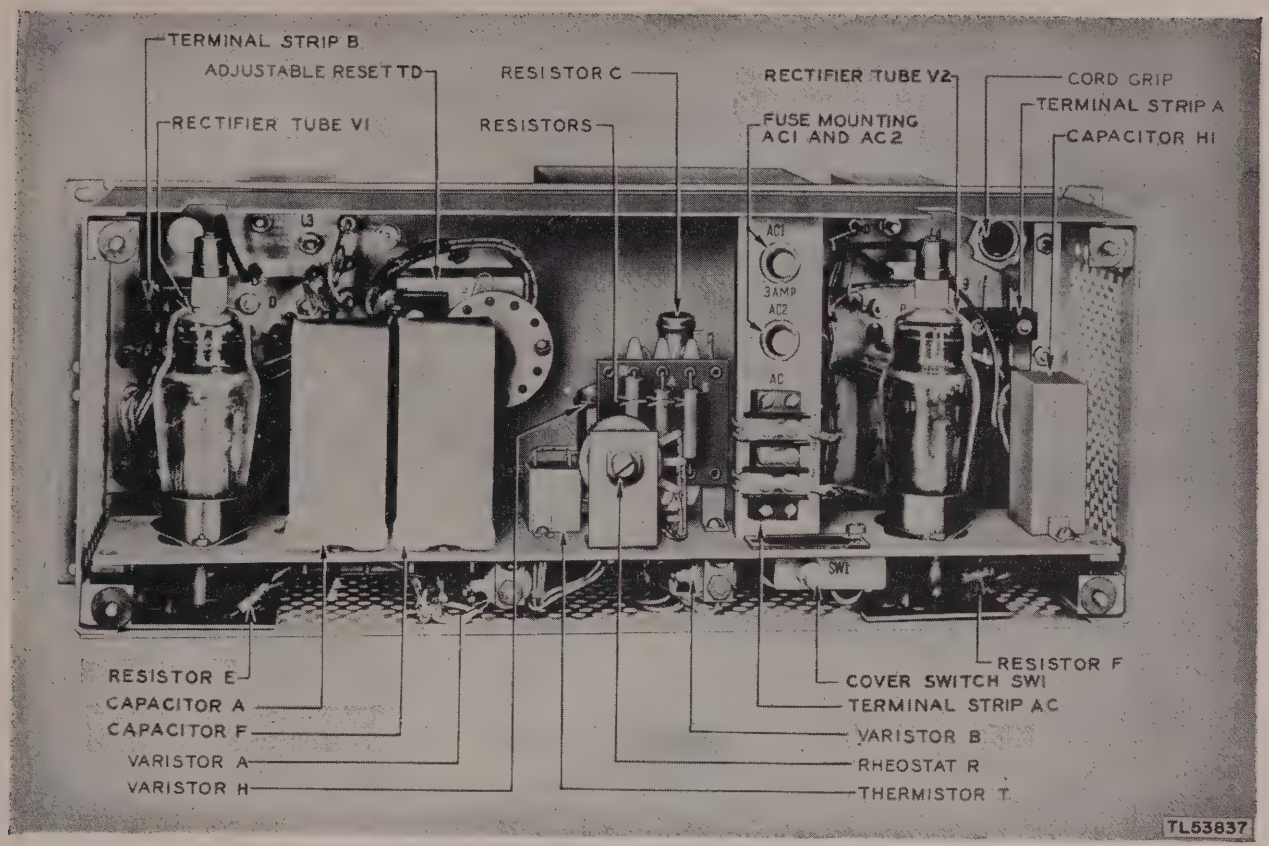

Figure 43. Front view of regulated tube rectifier.

of the rectifier case over either the a-c or the d-c leads.

(2) The ripple in the d-c output is reduced by a two-stage filter. The first stage consists of retardation coil L1 and six capacitors, C1 to C6, which have a combined capacitance of 750 microfarads. The second stage consists of retardation coil L2 and two capacitors, C7 and C8, which have a combined capacitance of 250 microfarads. On the positive rectifier, the telegraph output is taken off between the filter stages so that noise from the telegraph will not be applied to the plate output. Coil L2 is omitted in the negative rectifiers. A relay designated R is provided in each rectifier to open the telegraph output lead when the rectifier is not operating. Relay R is operated on alternating current supplied by the secondary winding 17–19 of transformer T1. Capacitor B effectively bypasses the potentiometer for sudden changes in output voltage, thereby making the grid control circuit more responsive to rapid changes in load.

(3) Capacitors A and F, with resistor G, filter the ripple introduced by varistors A, B, and H, preventing it from being applied to the grids of the tubes.

f. Tube Operation. (1) The tubes are of the three-element, gas-filled type. The point in the a-c cycle at which they start firing (conducting current) is controlled by the negative grid bias, or difference between the voltage of the grid and that of the filament. The greater the negative grid bias, the higher the plate voltage must be before the current starts to flow, but for any tube there is a critical negative grid bias beyond which the tube will not fire. After starting to fire, a tube continues to conduct current for the rest of the a-c half-cycle, and the output current (therefore, the maintained voltage) depends on how much of each half-cycle each tube is firing. Tube V1 fires during one half-cycle and tube V2 during the other half-cycle. This gives full-wave rectification. Changes in output voltage are reflected through the grid control circuit to change the output and return the voltage to the regulated value.

(2) At light loads, it is not necessary for the tubes to fire every cycle, as capacitors C1 to C8 carry the load for a few cycles, during which time the grid bias is enough to prevent firing of the tubes. When the output voltage decreases below the regulated value, the tubes fire again for a few cycles to recharge the capacitors. This type of operation is evidenced by a flicker in the glow within the tubes and by vibration of the needle of the voltmeter. At extremely light loads, firing of one tube only is enough to keep the output voltage at regulated value. At heavy load, and with the tubes loaded approximately equally, the flow from the tubes will not necessarily be uniform because of variations in temperature and physical characteristics of tubes.

(3) *Cathode trouble* is usually caused by open filament or low emission. With low emission the tube will glow and appear normal, but still be unsatisfactory. *Grid trouble* may be caused by high firing point or grid emission. *High firing point* means that too high a voltage is necessary to fire the tube. While changes in rheostat R (or +TG or −TB) setting can be made to compensate in part for this condition, the tube is inclined to be unstable at light loads and high line voltages. Replace it if it causes erratic operation. *Grid emission* sometimes occurs because cathode material has been carried over to the grid. When the temperature of the tube becomes high enough to cause this active material on the grid to give off electrons, the grid loses control, and high output voltage results. This effect disappears as the tube cools, so that satisfactory operation may be possible at light loads when it is not possible at full load.

g. Cover Switch. When the rectifier cover is removed, a cover switch SW1 opens one side of the line to protect operating personnel from the relatively high plate voltages within the rec-

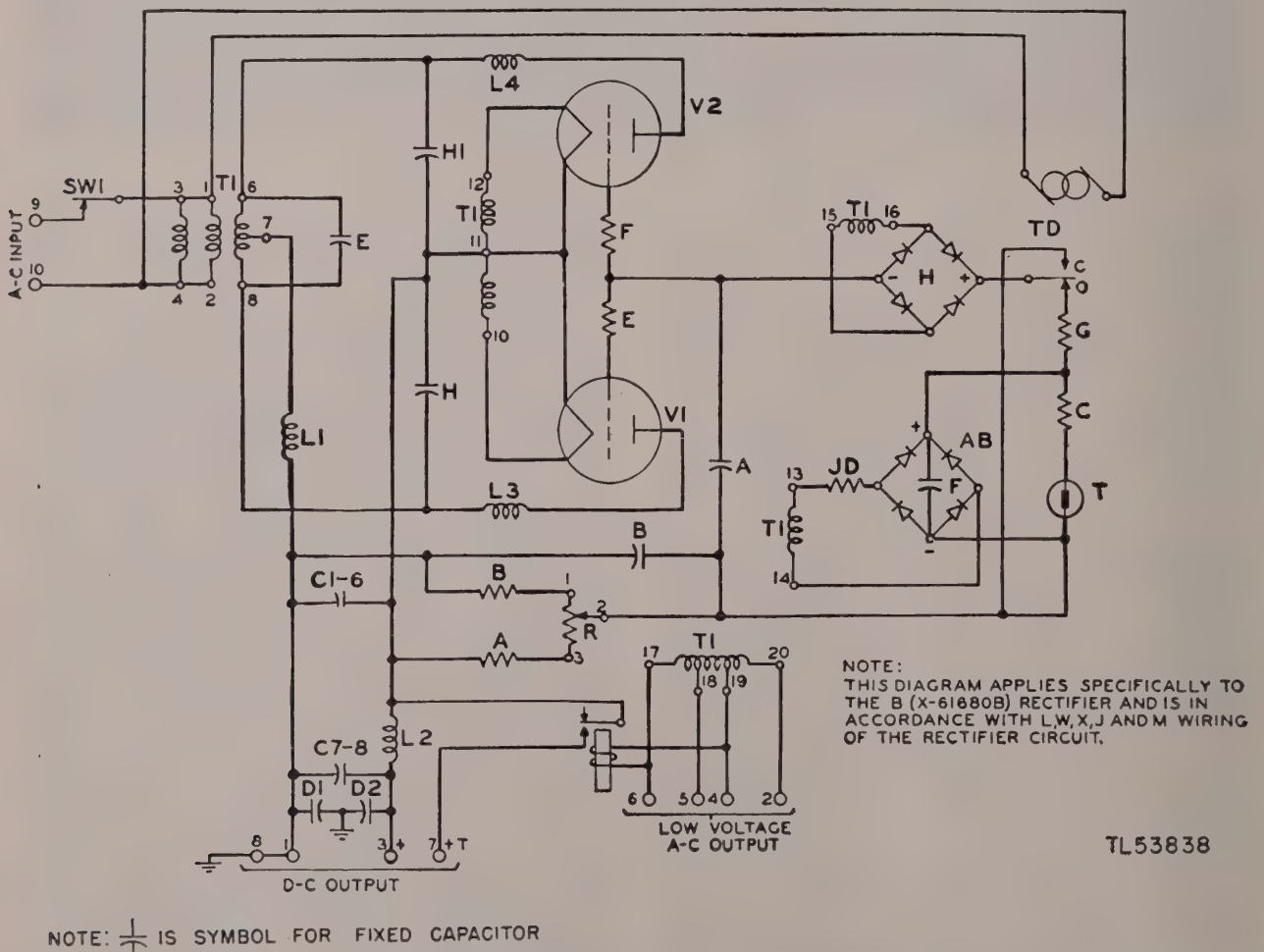

Figure 44. Regulated tube rectifier, functional diagram.

tifier. The cover switch does not remove power supply voltage from the two-point input terminal strip, and if the a-c line lead connected to terminal 10 of this terminal strip is ungrounded, the fuses, terminal strip AC, transformer T1, primary terminals, and a-c wiring to timer TD will be alive, even when the cover switch is operated. To avoid shocks and destructive short circuits, disconnect the a-c supply before working on the rectifier, unless a live circuit is necessary, as it is when you are taking point-to-point voltages.

Section XIV. TROUBLE LOCATION

57. Test Equipment

A variety of testing equipment is necessary for the installation, operation, maintenance, and repair of the carrier telegraph terminal. Testing equipment required for trouble location is listed in table X.

Table X. Test equipment

Nomenclature	Signal Corps Stock No.	Description	Usage
Tube Tester I–177	3F5700–177	Tube tester	Test vacuum tubes.
Voltohmmeter I–166	3F166	Volt-ohm-meter	Electrical measurements.
Test Set TS–2/TG	4TED57GG	Teletypewriter signal distortion test set.	Teletype transmission measurements.

58. Technique of Trouble Location

a. GENERAL. This section outlines methods for locating and clearing troubles in the carrier telegraph terminal. The general procedure is to localize the trouble to the telephone facilities over which the system is operating, the loop circuit, the d-c telegraph equipment, or to the carrier telegraph terminal itself. If trouble is found to be in the carrier telegraph terminal, it is further localized to the particular channel or component as outlined in the following tables.

b. TROUBLE INDICATION. Trouble is normally indicated by no transmission, by continuous errors in transmission, or by occasional errors in transmission. Such trouble may occur on all channels or it may be limited to one channel. If transmission cannot be obtained on any channel, the trouble may be in the line facilities, carrier telephone, or voice-frequency equipment over which the carrier telegraph system is being operated. If irregularities occur on all channels, the trouble may be in the line facilities used for transmission, or in the common equipment of the carrier telegraph terminal. Table XI lists a number of trouble indications, the probable troubles, and the remedies to be applied.

Table XI. Trouble indications

Trouble indication	Probable trouble	Remedy
No meter indication for both rectifiers. (See par. 24*c*(1).)	No alternating current at telegraph bay. A-c power failure.	
Each rectifier: no output voltage, low output voltage, high output voltage, erratic output voltage.	See table XII.	See table XII.
Polar relay does not meet requirements.	Relay needs adjustment. (See par. 44.)	Refer to par. 30*d* and 45.
Receiver current less than 30. (See par. 24*e*.)	Blown plate fuse or filament fuse.	Replace fuses or tubes. Trouble may also be in line or distant terminal.
	Vacuum tube V1, V2, V3, V4, or V5 inoperative.	
Meter does not indicate loop current. (See par. 24*d*.)	Blown +130-volt or −130-volt fuse.	Replace fuses if blown. Check loop circuit for continuity and polarity of terminating battery.
	Loop open or in spacing condition.	
	Loop not terminated in proper polarity.	
	Loop wires not properly connected to binding posts.	

Table XI. Trouble indications (cont'd.)

Trouble indication	Probable trouble	Remedy
Send bias cannot be adjusted to 0.	Station or telegraph switchboard not sending repeated space signal.	
	Large amount of bias in repeated space signal being transmitted from station or switchboard.	
	BK relay not in proper adjustment.	
Teletypewriter runs open.	Blown +130-volt or −130-volt fuse.	Replace blown fuses. Operate REC INPUT knob to MK. If teletypewriter then runs closed, trouble is in distant terminal sending equipment, line facilities, or improper lineup of receiving circuit. If teletypewriter runs open when REC INPUT knob is operated to MK, check the loop circuit for continuity and for proper polarity of terminating battery.
	REC relay not operated to marking contact. Check to see that the REC input knob is operated to MK.	
	Loop circuit is open or in spacing condition.	

Table XII. Trouble indications, power rectifiers

Trouble indication	Possible cause	Remedy
No output voltage	A-c supply may be interrupted	Check power connections and fuses.
	Cover switch open	Tighten cover screws.
	Plate cap of tube open	Check position of plate cap.
	Failure of main filter capacitor	Check for short circuits and if necessary replace capacitor C1 to C8.
	Failure of tube, possibly filament lighted, but no emission.	Replace tube. (See par. 56*f*.)
	Relay R not operated	Refer to par. 63*b*.
	Timer TD not operated	Refer to par. 63*a*.
Low output voltage	A-c supply voltage may be low	Measure a-c supply voltage.
	Load current may be too high	Refer to par. 4*c*.
	Low emission in tube, though still lighted	Replace tube, par. 56*f*.
	Regulating circuit may be in trouble	Attempt to raise and lower voltage with rheostat +TG or −TG.
	Low reference voltage	Refer to par. 56*d*.
High output voltage	A-c supply voltage may be high	Measure a-c supply voltage.
	High grid emission	Refer to par. 56*f*.
	Regulating circuit may be in trouble	Attempt to raise and lower voltage with +TG or −TG. rheostat.
Erratic output voltage	Tube may have high firing point	Refer to par. 56*f*.
	Trouble in reference voltage circuit	Look for loose connections, especially at capacitors.

Table XIII. Power-supply voltages.

Note. The point-to-point voltages are based on an a-c input voltage of 115 volts at 60 cycles, a 130-volt d-c load of 0.3 ampere from output terminals 1 and 3, and no a-c output. Such voltages vary not only with input voltage and load but also with different apparatus,

such as tubes, varistors, capacitors, etc. Allow reasonable tolerances from the specified voltages. Use Volt-ohmmeter I–166. Another type of 1000-ohm-per-volt instrument may be substituted, using the largest scale that gives a good indication. Cover switch SW1 must be held closed while the voltages are being checked. An easy way to do this is to make up locally a 1⅝-inch C clip from light metal and insulate it with friction tape. Slip the clip over the end of the operated plunger and the rear of the switch box. Remove this C clip before replacing the cover and putting the rectifier back into service.

Warning. Do not touch live terminals with the hands, high voltages are present. Do not let a test pick touch two metal parts at the same time. This may produce destructive and dangerous short circuits.

A-C VOLTAGES

Indication	Measure between terminals	Typical a-c volts
Rectifier input	1 and 3 on a-c terminal strip	115
Varistor A and B input	2 of varistor A and 2 of varistor B	54
Varistor H input	15 and 16 of transformer T1	15
A-c output	6 and 5 of 8-point terminal strip	6.4
Filament	2 and 7 of tube V1 or V2	2.4

D-C VOLTAGES

Indication	Plus terminal of voltmeter to terminal	Minus terminal of voltmeter to terminal	Typical d-c volts
Grid bias	+ of capacitor C3	Rear of capacitor A	2–4
Reference voltage	Rear of capacitor F	Front of capacitor F	42–50
Resistor A	+ of capacitor C3	3 of rheostat R	31
Varistor H output	Zero of timer TD	Rear of capacitor A	11. 8
Resistor G	Zero of timer TD	Rear of capacitor F	1.4
Retardation coil L1	1 of retardation coil L1	2 of retardation coil L1	3.8

Table XIV. Test data for receiver circuit.

Preparation for test. Adjust power rectifiers to 130 volts (meter indication of 65). Provide straps at line binding posts for four-channel, two-wire operation. Connect 600-ohm resistance across binding posts T and R of line 1, or a WECo 5A attenuator set at 10 db or more. Measurements of d-c voltage are based on the use of a voltmeter having a resistance of 1,000 ohms per volt.

Voltage measured	Measure between terminals	Approximate voltage	
		REC INPUT knob to SP	REC INPUT knob to MK
Heater, tube V1	2 and 7	6.0 alternating current	6.0 alternating current
Plate, tube V1	8 and ground	65–70 direct current	65–70 direct current
Screen, tube V1	6 and ground	20–25 direct current	20–25 direct current
Resistor R10	Across resistor	20–25 direct current	20–25 direct current
Resistor R11	Across resistor	80–90 direct current	80–90 direct current
Resistor R12	Across resistor		2 direct current
Resistor R57	Across resistor	12 direct current	12 direct current
Heater, tube V2	2 and 7	6.0 alternating current	6.0 alternating current
Plate, tube V2	8 and ground	120–125 direct current	120–125 direct current
Screen, tube V2	6 and ground	128 direct current	128 direct current
Cathode, tube V2	5 and ground	4 direct current	4 direct current
Resistor R16	Across resistor		40 direct current
Heater, tube V3	2 and 7	6.0 alternating current	6.0 alternating current
Cathode, tube V3	5 and ground	40–45 direct current	40–45 direct current
Heater, tube V4	2 and 7	6.0 alternating current	6.0 alternating current
Plate, tube V4	8 and ground	80 direct current	75 direct-current
Screen, tube V4	6 and ground	115 direct current	95 direct current
Cathode, tube V4	5 and ground	24 direct current	27 direct current
Resistor R18	Across resistor	0 direct current	25 direct current
Resistor R60	Across resistor	85 direct current	85 direct current
Resistor R64	Across resistor	48 direct current	52 direct current

Table XV. Test data for oscillator circuit

Preparation for test. Adjust power rectifiers to 130 volts (meter indication of 65). Measurements of d-c voltage are based on the use of a voltmeter having a resistance of 1,000 ohms per volt.

Voltage measured	Measure between terminals	Approximate voltage
Heater, tube V5.	2 and 7	6.0 alternating current
Plate, tube V5	8 to ground	126 direct current
Screen, tube V5.	6 to ground	128 direct current

Table XVI. Test data for d-c loop circuits, NEUTRAL TO POSITIVE (OR NEGATIVE) BATTERY-HALF DUPLEX

Preparation for test. Turn LOOP knob to NEUTRAL TO POS (or NEG) BAT-HALF DX. Turn SL RES and RL RES knobs as far to the left (counterclockwise) as possible. Turn SEND BIAS knob as far to the right (clockwise) as possible. Turn REC INPUT knob to MK. Provide strap between binding posts SL and RL. Voltage measurements are based on the use of a voltmeter having a resistance of 1,000 ohms per volt. Adjust power rectifiers to 130 volts (meter indication of 65).

Measure between terminals	Approximate d-c voltage
Of coil L2	2.5
3 and 6 of SEND relay*	5.0
3 and 6 of BK relay*	5.0
2 and 7 of SEND relay*	3.3
2 and 7 of BK relay*	3.3
Of resistor R71	20
1 and 2 of SL RES potentiometer	103
Of resistor R78	
Of resistor R77	1.3
1 and 2 of RL RES potentiometer	103
Of resistor R70	15
Of resistor R69	9
Middle and bottom of resistor R67	30
1 and 3 of SEND BIAS potentiometer	73
Of resistor R68	17

For the following voltage measurements, insert a short-circuited plug in REC-RED jack.

Measure between terminals	Approximate d-c voltage
Of resistor R75	143
Of resistor R76	117

For the following voltage measurements, insert a short-circuited plug in SEND-BK jack.

Measure between terminals	Approximate d-c voltage
Of resistor R62	175
Of resistor R63	84

* The voltages are for LOOP knob on NEUTRAL TO POS BAT-HALF DX. If LOOP knob is on NEUTRAL TO NEG BAT-HALF DX, the voltages for windings 3–6 and 2–7 should be interchanged.

Table XVII. Test data for d-c loop circuits, POLARENTIAL-HALF DUPLEX

Preparation for test. Turn loop knob to POLARENTIAL-HALF DX. Turn SL RES knob as far to the left (counterclockwise) as possible. Turn REC INPUT knob to MK. Connect ground to binding post SL. Voltage measurements are based on the use of a voltmeter having a resistance of 1,000 ohms per volt. Adjust power rectifiers to 130 volts (meter indication of 65).

Measure between terminals	Approximate d-c voltage
Of coil L2	3.5
Of resistor R73	45
Of resistor R74	80
3 and 6 of SEND relay	3.0
3 and 6 of BK relay	3.0
Of resistor R71	12
1 and 2 of SL RES potentiometer	62
Of resistor R78	1.0
Of resistor R65	70
Of resistor R66	45
2 and 7 of SEND relay	7.0
2 and 7 of BK relay	7.0

Table XVIII. Test data for d-c loop circuits, TWO-PATH POLAR-FULL DUPLEX

Preparation for test. Turn loop knob to TWO-PATH POLAR-FULL DX. Turn RL RES knob as far to the left (counterclockwise) as possible. Turn REC INPUT knob to MK. Provide strap between binding posts SL and RL. Voltage measurements are based on the use of a voltmeter having a resistance of 1,000 ohms per volt. Adjust power rectifiers to 130 volts (meter indication of 65).

Measure between terminals	Approximate d-c voltage
Of coil L2	1.5
Of resistor R70	15
1 and 2 of RL RES potentiometer	100
Of resistor R77	1.3
Of resistor R78	1.3
3 and 6 of SEND relay	5
3 and 6 of BK relay	5

59. Schematic Drawings and Wiring Diagrams

a. GENERAL. Schematic drawings of the telegraph terminal and rectifier circuits are placed inside the front cover of the equipment. Wiring diagrams of the channel and oscillator are contained inside the rear cover. Reproduction of similar drawings are included at the back of this manual.

b. SCHEMATIC DRAWINGS. Circuit schematic drawings show each circuit in a form for use in testing and maintaining the equipment. Schematic drawings include the characteristics of each piece of apparatus. The assignment of terminals on panels together with the external wiring connections are also shown.

c. WIRING DIAGRAMS. (1) Wiring diagrams are associated with the schematic drawings. They show in a semipictorial manner the apparatus as viewed from the wiring side. The size of the wire, color codes, cabling, and the connections, between the terminals of each piece of apparatus forming a circuit, are shown. The lay-out of the apparatus used on the wiring diagram agrees as far as practicable with the position of the apparatus on the panel on which it is mounted.

(2) Wiring diagrams use the airline system to show connections. Each piece of apparatus is numbered and the lines representing the individual wires are carried from each piece of apparatus to a common base line. The lines are marked with the color of the wire and are numbered to correspond with the apparatus number to which the other end connects. It is not necessary to follow a connection through the base line and no provision is made for doing so. By observing the color and identification number, it is possible to move directly to the other end of the wire.

Section XV. REPAIRS

60. Replacement of Parts and Components

All parts of the telegraph terminal are readily accessible for replacement. Before replacing a part or making wiring changes, remove the fuses associated with that particular circuit, or if the entire system is affected, disconnect the a-c power cord. When replacement of a part requires the disconnection of numerous wires, mark the wires with tags or other devices to avoid errors in connections when the new part is installed.

Caution. Voltages used in this equipment are high enough to endanger life and may be fatal if contacted. Do not contact high-voltage plate circuits and a-c power connections. Perform all tests with insulated test leads.

61. Maintenance of Polar Relays

a. GENERAL. (1) Remove polar relays from the circuits for cleaning, inspection, testing, and adjustment. The procedures for putting a relay in good operating condition are:

(*a*) Inspect and clean the relay (*c* below) before readjusting (*e* below) when the relay has failed to meet the tests given in the *polar relay test* instructions. These instructions are located on the left side of the filter and test panel. (See fig. 15.)

(*b*) Make additional checks and mechanical adjustments (*d* below) when a relay cannot be made to meet its electrical requirements (*e* below) after inspection and cleaning operations. (See *c* below.) Also make these adjustments when completely reconditioning a relay.

(*c*) Make mechanical and electrical adjustments (*e* below) needed to make the relay meet its electrical requirements.

(2) Cleaning and mechanical adjustments may be done with the relay removed from the connecting block. Mechanical and electrical adjustments to make a relay meet its electrical requirements must be made with the relay in the connecting block of the relay test circuit.

b. TOOLS. The tools furnished for the adjustment of the polar relays (fig. 45) includes two tools (340), one contact burnisher (265C), one file (KS–2662), one gauge (74D), and one screw driver (KS–6854).

c. INSPECTION AND CLEANING. (1) *Removal of cover.* Remove the cover from the relay by turning it to the left (counterclockwise) and pulling it forward.

(2) *Contact surfaces.* If the contacts are not pitted or built up, proceed to clean the pole-piece surfaces. (See (3) below.) If the contacts are pitted or built up, recondition them by filing, followed by burnishing. Using a 340 tool, back off the contact screw on the side, where pitting or build-up is present, to permit the KS–2662 file to enter easily between the

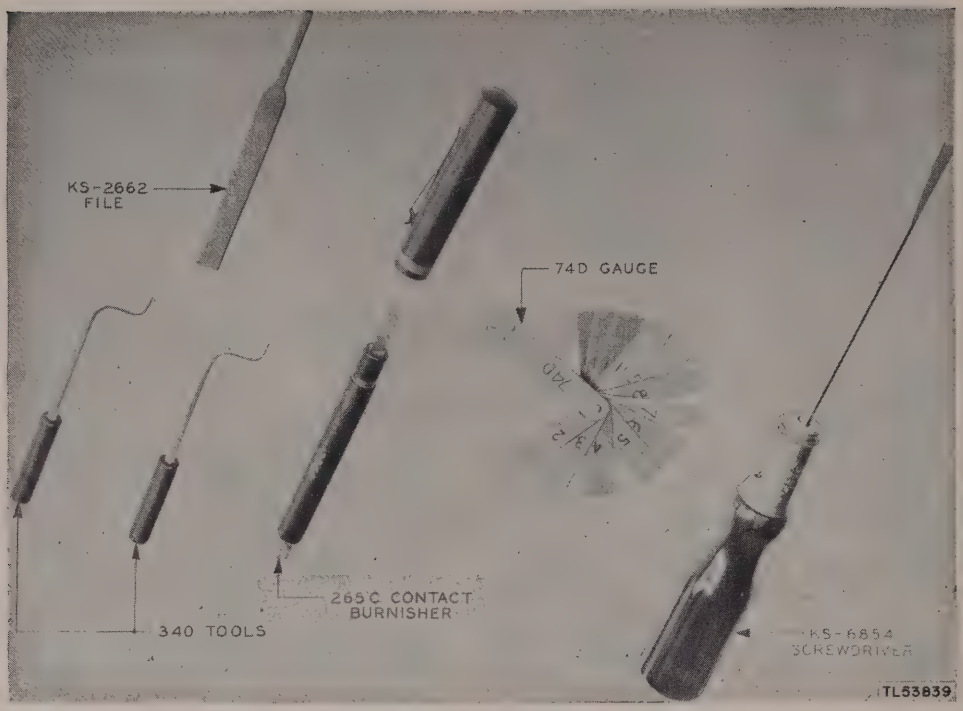

Figure 45. Polar relay adjusting tools.

contact and the armature. Insert a tapered stick between the contact springs to prevent damage to the springs. Do not insert the stick far enough to separate the contact springs. Then insert the file parallel to the axis of the armature. File the contacts one at a time, being careful to move the file in and out parallel to the axis of the armature. Since the contacts of the armature are of a fairly soft alloy, take care not to remove too much material. After filing, burnish with 265C burnisher. Continue to hold the tapered stick between the two flexible contact springs, and insert the burnisher between the two contacts. Do not insert the stick far enough to separate the contact springs. (See fig. 46.) Do not handle the blade of the burnisher with the fingers. Before using the blade, clean it with a clean, lint-free cloth moistened with clean carbon tetrachloride (if available). Move the blade of the burnisher in and out, parallel to the axis of the armature.

(3) *Pole-piece surfaces.* Loosen the knurled tension nuts on the pole-piece screws with the fingers, then back off the pole-piece screws with a 340 tool (or a KS–6854 screw driver) as far as they will go. (See fig. 47.) Remove any foreign materials on the pole piece with a thin piece of metal covered with friction tape. Do not use a burnisher. Press (do not rub) the tape against the pole piece. Use the tape only once.

(4) *Relay cover.* Invert the cover and tap it to loosen dirt, then wipe it with a clean, dry, lint-free cloth.

d. Additional Check and Mechanical Adjustments. (1) *General.* Make the following

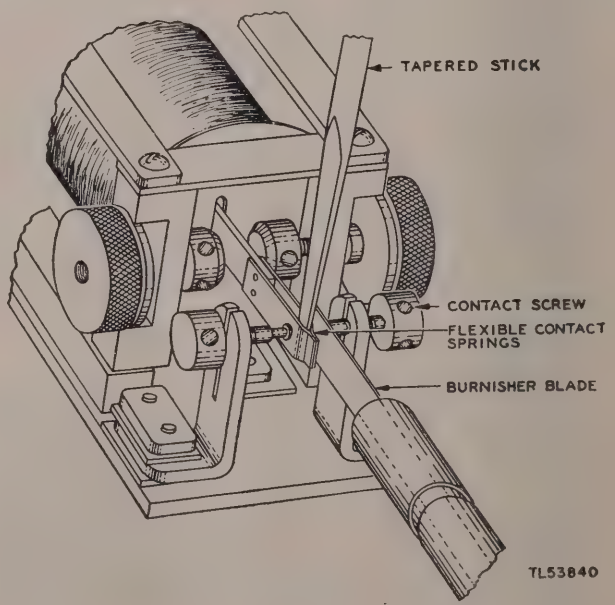

Figure 46. Method of burnishing polar relay contacts.

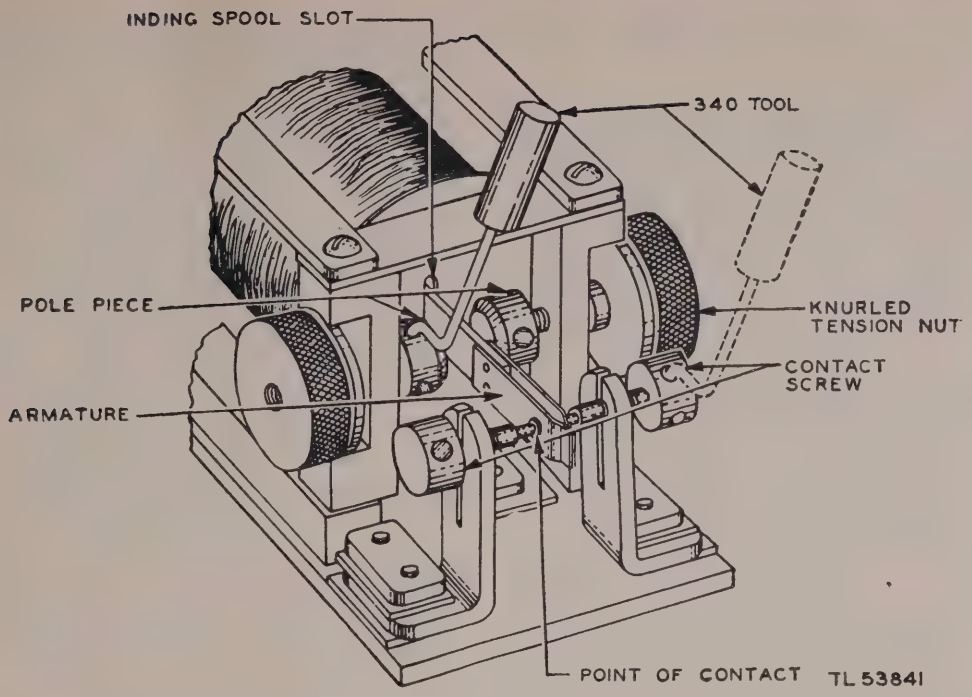

Figure 47. Part of polar relay showing method of using 340 tool.

adjustments only when reconditioning a relay completely, or when a relay cannot be made to meet the electrical requirements (*e* below) after inspection and cleaning. (See *c* above.)

(2) *Armature appearance.* Back off the pole-piece screws as far as they will go. With a 340 tool back off both contact screws several turns. Remove the armature by loosening the screws in the supporting bracket in the armature heel piece, and move the armature out through the winding spool slot. See that the armature is straight. See that there are no irregular projections from the portion of the armature surface held by the clamping piece. See that the flexible springs are flat and in contact for at least 25 percent of the width. If these requirements are not met, replace the armature with a new one. Insert the new armature and tighten the screws. See that the armature is centered properly in the spool slot and that the contact screws strike the contacts on the armature as near the center as possible.

(3) *Armature clearance.* Back off the contact screws several turns with a 340 tool, and check to see that the armature is held approximately in the center between the contact screw supporting brackets. See that the armature is centered properly in the spool slot. If the armature is not in the center between the contact supporting brackets, loosen the screws holding the armature heel piece and readjust to center the armature in the slot. Tighten the screws. If the armature is not centered horizontally in the spool slot, loosen the screws that hold the front and rear spool heads to the frame of the relay, and move the coil to the right or left as required. Tighten the screws. If the armature is not centered vertically in the spool slot, loosen the screws holding the armature to its heel piece, and move the armature up or down to bring the stationary screw contacts and the armature contacts into proper alignment. Tighten the screws.

(4) *Contact alignment.* The right and left screw contacts should be entirely within the area of the larger spring (armature) contact. When they are not, loosen the screws holding the armature to its heel piece and move the armature up or down, to the front or rear, to line up the contacts and center the armature in the slot. Tighten the screws. If it is impossible to align the contacts in this manner, or if the contact screws are not in line, loosen the screws holding the contact screw bracket to the base of the relay. Then move the bracket until the contacts line up properly. In making these adjustments, set the contact screw brackets so that the contact screws strike the armature

contact as near the center as possible. Retighten all screws.

(5) *Pole-piece screw alignment.* The right-hand and left-hand pole-piece screws should be in line and at right angles to the armature. Check the alignment with the pole-piece screws advanced near the armature. If they are not in line, loosen the screws on the top and bottom, holding the pole-piece screw support, and move them by hand until they are in line. Tighten the screws.

(6) *Tightness of contact screws.* If the contact screws do not hold adjustment, remove the screws from the bracket and force the split ends of the bracket closer together with pliers and replace the screws.

(7) *Tightness of mounting and assembly screws.* Check to see that the terminal block mounting screws hold the relay base tightly to the terminal block. If they do not, tighten the screws. Check to see that the assembly screws on the base of the relay are tight. If any are loose, tighten them.

(8) *Tightness of relay terminals, nuts, and cover.* Check to see that the mounting posts are held firmly to the terminal block by the associated locknuts. If the posts are loose, tighten the nuts with a $\frac{3}{8}$-inch wrench. Check to see that the relay terminals are straight and that they are held tightly to the terminal block. Tighten if necessary with a $\frac{5}{32}$-inch wrench. If the terminals are not straight, straighten them with pliers. Be careful not to twist the connecting wires from the terminals. Make sure that the cover-locking plate holds the relay cover firmly against the terminal block. Remove the cover by using the fingers. If the cover is not held firmly, apply pliers at the crimp in the cover-locking plate.

e. ADJUSTMENT OF RELAY USING RELAY TEST CIRCUIT. (1) *General.* Place the polar relay in the relay test connecting block on the filter and test panel. Connect the METER cord to the RELAY TEST jack. Remove the relay cover. If both pole-piece screws are not backed off, back them off as far as possible with a 340 tool or a KS–6854 screw driver. With a 340 tool, turn both contact screws in the direction away from the armature until there is a clearance between the armature and both of the stationary contacts.

(2) *Armature travel adjustment.* Advance the right contact screw until it just touches the armature, as shown by a meter deflection to the right. Then back it off by turning it in the opposite direction for a distance equal to one-third of the angle between adjacent holes in the contact screw. Repeat with the left-hand contact screw until the meter reads to the left. Check armature travel limits of 0.003 inch to 0.005 inch with a clean 74D gauge. Do not touch the blades of the 74D gauge with the fingers. Clean the blade, before using, with a clean, lint-free cloth moistened with clean carbon tetrachloride, if available. Hold the armature lightly against one contact and check the contact gap. The 0.003-inch blade should pass easily between the armature and the contact, and the 0.005-inch blade should pass through with pressure. Check the other contact.

(3) *Pole-piece screw adjustment.* (*a*) Using a 340 tool, advance the right-hand pole-piece screw until it is near the armature. Tighten the knurled tension nut with the fingers until a noticeable increase in force is needed to move the pole-piece screw. Continue to advance the right-hand pole-piece screw until it touches and moves the armature far enough to cause the armature to close the left-hand contact, as indicated by a meter deflection to the left. Back off the pole-piece screw more than one-quarter turn but less than one-half turn. Using a 340 tool, advance the left-hand pole-piece screw until it is near the armature. Tighten the tension nut on the pole-piece screw in the same way that the tension nut on the right-hand pole-piece was tightened.

(*b*) Throw levèr A to BIAS. Turn the pole-piece screw to move the pole piece toward or away from the armature until the average indication of the meter is 0.

(*c*) Throw lever A to SENSITIVITY and throw lever B to SPACE. This applies a soak current, which flows through the relay in a direction opposite to that for operating the relay to its spacing contact. The meter should indicate 100 to the right of 0.

(*d*) Throw lever C to OPR. This applies a lower value of current in the direction for operating the relay to its spacing contact. The meter should indicate 100 to the left of 0.

(*e*) Throw lever C to NON OPR. The meter should indicate 100 to the right of 0. As lever C is moved through its midposition, a soak cur-

rent is again applied, and the meter indicates 100 to the right of 0. With the lever in the NON OPR position, the current is in the right direction, but it is not great enough to operate the relay to its spacing contact.

(*f*) Throw lever B to MARK. The meter should indicate 100 to the left of 0. This applies a soak current in the direction opposite to that for operating the relay to its marking contact.

(*g*) Throw lever C to OPR. The meter should indicate 100 to the right of 0.

(*h*) Throw lever C to NON OPR. The meter should indicate 100 to the left of 0.

(*i*) If the operate tests (with lever C on OPR) fail, make the relay more sensitive. That is, make it operate on less current: Throw lever A to BIAS and turn the right-hand pole-piece screw to back it away from the armature until the meter indicates about one-half of a scale division to the left of 0. Turn the left-hand pole-piece screw to move the pole piece away from the armature until the meter indicates 0. Continue this procedure until the requirements in (*d*) and (*g*) above are met, and then repeat the operations in (*e*) and (*h*) above.

(*j*) If the nonoperate tests (with lever C on NON OPR) fail, make the relay less sensitive, that is, make it require more current to operate. Throw lever A to BIAS and turn the right-hand pole-piece screw to advance it toward the armature until the meter indicates about one-half of a scale division to the right of 0. Turn the left-hand pole-piece screw until the meter reads 0. Continue this procedure until the requirements in (*e*) and (*h*) above are met, and then repeat the operations in (*d*) and (*g*) above.

(*k*) If both the operate and nonoperate tests fail, that is, if the meter indicates 0 when lever C is throw to OPR or to NON OPR for both mark and space the armature is too far from the pole pieces. To correct this, proceed as instructed in (*j*) above.

f. Gas Adsorbing Units. If the relay armature or contacts have a sooty deposit, as determined in paragraph 30*d*, add gas adsorbing unit (Gas Adsorber Assembly, Sig C stock No. 6Z60) to the sides of the relay. An instructive photograph is furnished with each gas adsorber assembly. Before moistureproofing and fungiproofing the equipment, remove the polar relays and install or replace the gas adsorbing units.

62. Oscillator Adjustment

If the requirement of the oscillator test (par. 14*e*) cannot be met by following the outlined procedures, and no other trouble can be found, adjust the oscillator output to bring the indication to 70 +15. Shift the connection of a wire by using a soldering iron. To make this adjustment, proceed as follows:

a. Remove the back panel of the bay and locate the channel frequency oscillator to be adjusted. In the rear of the oscillator is a group of round type resistors, R36 to R51. These are the resistors used in this adjustment.

b. Turn SEND LEVEL knob to LOW and SEND CARR knob to MK.

c. Turn the SEND FREQ on the channel frequency oscillator panel and the SEND FILTER knob on the filter and test pan to A (HIGH). Unsolder the yellow-green wire where it is attached to one of the resistors (R36 to R51) and move it to the next resistor. (See fig. 48.) If a meter reading of 70 +15 is not obtained, continue moving the yellow-green wire from one resistor to another until the meter reading is obtained.

d. Turn SEND FREQ and SEND FILTER knob to B (LOW), and connect the yellow wire to the resistors as above until a meter indication of 70 +15 is obtained.

e. Solder the wires in the positions which give the desired indication on the meter, and replace the back panel.

f. Disconnect the METER cord. Restore the METER knob to NORM and the SEND CARR knob to NORM.

g. Restore the SEND FREQ, SEND FILTER, SEND LEVEL knobs to their former positions.

63. Power Rectifiers

a. Adjustable Reset Timer. **(1)** *Test.* When the telegraph terminal is first put into operation, or soon afterwards, make the following test on each reset timer: With the power disconnected and with the cover off, remove the two tubes and turn the rheostat R (marked +TG or —TG on cover) as far to the left (counterclockwise) as possible. To remove a tube, lift off the cap at the top, press down the spring

clip near the base, and carefully pull the tube straight up. See that the tube cap does not touch any part of the rectifier. Then connect the power, operate the cover switch SW1 by hand, and observe the operation time of timer TD. This is indicated by a slight click in the timer. The time should be 14 to 17 seconds. Disconnect power and note that the timer releases and returns to normal in 5 seconds or less. If the timer is operating correctly, replace the tubes with the power still off. Replace the caps on the tubes.

(2) *Maintenance requirements.* (*a*) The adjustable reset timer in each rectifier circuit needs no lubrication or contact maintenance.

(*b*) The rotating disk of the timer should rotate to its stop position in 14 to 17 seconds after the power is turned on. The rotating disk should restore to normal in 4 to 7 seconds after the power is disconnected. If the timer does not function properly, replace it. When installing a new timer, check to see that the pins on the rotating disk of the timer are in the same location as on the one being replaced.

(*c*) The spring arm should have a slight follow (further movement) when raised by hand with the power disconnected, after the contact closes and before the spring arm reaches the stop. Contact closure is indicated by a slight click. This adjustment is controlled by a setscrew. The spring arm needs little maintenance. When maintenance is required, adjust it with a screw driver.

b. RELAY R. Relay R, used in the rectifier, is rated at 6.3-volts alternating current but should operate at from 5.5 to 7.5 volts. The contact pressure in the operated position should be great enough to give firm, continuous contact. It is designed to have a minimum contact pressure of 30 grams. Contact adjustment should not be necessary but may be made by a careful forming of the contact arm, using small pliers. If the contacts are dirty, dip a strip of bond paper in petroleum spirits or nonleaded gasoline and pull back and forth between the contacts with the armature held closed by hand.

c. ELECTROLYTIC CAPACITORS. Replace the electrolytic capacitors C1 to C8 with new ones after 3½ years from the date on the capacitor. If the rectifiers are not in use, operate them temporarily for ½ hour every 18 months to restore the film on the electrolytic capacitor plates.

d. VARISTORS A, B, AND H. Failure of a varistor may be caused by high voltage or excess temperature. If output voltage indications are less than 8 volts for varistor H, or less than 42 volts for varistors A and B, replace the defective varistor. Low output voltage indications show a failure of the disks.

e. THERMISTOR T AND RESISTOR C. When thermistor T or resistor C is replaced, select the C resistor tap that agrees with the resistance value stamped on the thermistor being used.

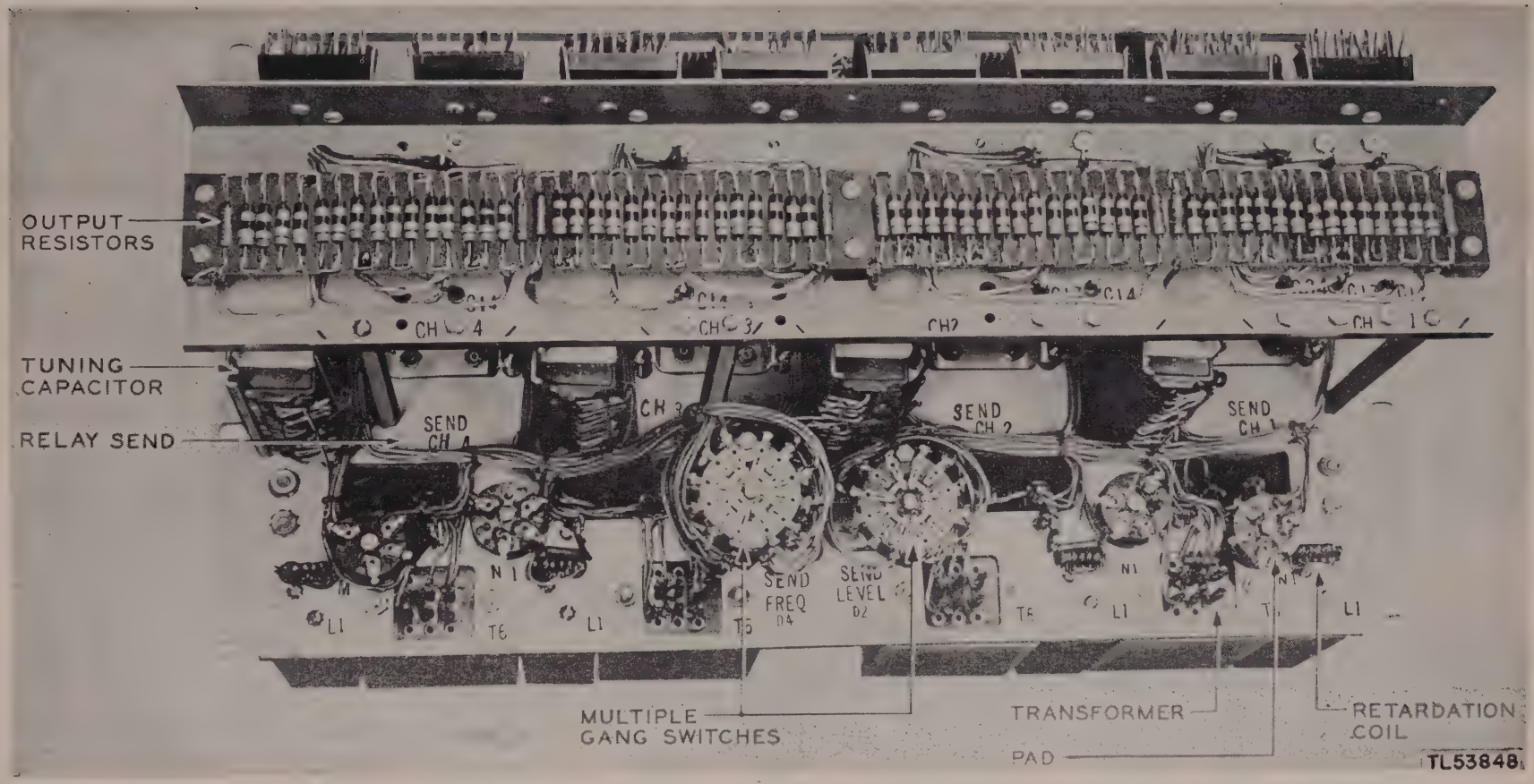

Figure 48. Channel frequency oscillator panel, rear view.

APPENDIX

REFERENCES

Note. For availability of items listed, check FM 21–6, FM 21–7, and WD Catalog SIG 2. Also see FM 21–6 for applicable Technical Bulletins, Supply Bulletins, Modification Work Orders, and changes.

1. Parts List

SIG 1.....Introduction.
SIG 2.....Index.
SIG 3.....List of Items for Troop Issue.
SIG 4–1.....Allowances of Expendable Supplies.
SIG 4–2.....Allowances of Expendable Supplies for Schools, Training Centers, and Boards.
SIG 5.....Stock List of All Items.
SIG 7–CF–2.....Organizational Spare Parts for Telegraph Terminal CF–2–A, B.
SIG 8–CF–2.....Higher Echelon Spare Parts for Telegraph Terminal CF–2–A, B.
SB 11–8.....Chests for Running Spares for Radio Sets SCR–506–( ), SCR–508–( ), SCR–528–( ), and SCR–538–( ).
SB 11–76.....Signal Corps Kit and Materials for Moisture-resistant and Fungi-resistant Treatment.

2. Technical Manuals on Auxiliary Equipment and Test Equipment

TM 11–2017.....Test Set TS–26/TSM.
TM 11–2208.....Test Set TS–2/TG.
TM 11–2613.....Voltohmmeter I–166.
TM 11–2627.....Tube Tester I–177.

3. Shipping Instructions

U. S. Army Specification No. 100–14A. Army-Navy General Specifications for Packaging and Packing for Oversea Shipment.

4. Decontamination

TM 3–220.....Chemical Decontamination, Materials and Equipment.

5. Demolition

FM 5–25.....Explosives and Demolitions.

6. Other Publications

FM 21–6.....List and Index of War Department Publications.
FM 21–7.....List of War Department Films, Film Strips, and Recognition Film Slides.
FM 21–8.....Military Training Aids.
FM 21–40.....Defense Against Chemical Attack.
TB SIG 13.....Moistureproofing and Fungiproofing Signal Corps Equipment.
TB SIG 66.....Winter Maintenance of Signal Equipment.
TB SIG 72.....Tropical Maintenance of Ground Signal Equipment.
TB SIG 75.....Desert Maintenance of Ground Signal Equipment.
TB SIG 169.....Tube Test Data for Test Set I–56A, B, C, D, E, H, J, and L.
TB SIG 123.....Preventive Maintenance Practices for Signal Equipment.
TM 11–455.....Radio Fundamentals.
TM 11–341.....Telephone Terminal Sets TC–21–A and TC–21–B (Carrier) and Repeater Set TC–23–A (Carrier).
TM 11–352.....Printer TG–7–A and Teletypewriters TG–7–B and TG–37–B.
TM 11–354.....Telegraph Printer Sets (Teletypewriter) EE–97 and EE–98; Teletypewriter Sets EE–97–A, EE–98–A and EE–102.
TM 11–355.....Telegraph Terminal CF–2–A (Carrier).
TM 11–358.....Telegraph Central Office Set TC–3.
TM 11–359.....Line Units BE–77, BE–77–A, and BE–77–B.
TM 11–475.....Principles of Long Distance Telephone and Telegraph Transmission.

TM 11–486	Electrical Communication Systems Engineering.
TM 11–487	Electrical Communication Systems Equipment.
TM 11–755	Grounds, Grounding Procedure, and Protective Devices for Wire Communication Equipment.
TM 11–2004	Repeater Set TC–18 (Terminal Telegraph).
TM 11–2005	Repeater Set TC–19 (Intermediate).
TM 11–2009	Telegraph Terminal CF–6 (Carrier).

7. Forms

WD AGO Form 468.	Unsatisfactory Equipment Report.
AAF Form 54	Unsatisfactory Report.

8. Abbreviations

ac	alternating current (noun).
a-c	alternating-current (adjective).
AGO	Adjutant General's Office.
amp	ampere(s).
arm	armature.
AWG	American Wire Gauge.
cap	capacitor.
carr	carrier.
chan	channel(s).
ckt	circuit.
conn	connect, connection.
cps	cycles per second.
db	decibel(s).
dbm	power in decibels referred to 1 milliwatt.
dc	direct current (noun).
d-c	direct-current (adjective).
equip	equipment.
fig	figure.
freq	frequency.
ga	gauge.
gnd	ground.
meg	megohm(s).
mf	microfarad(s).
mi	mile(s).
No	number.
osc	oscillator.
par.(s)	paragraph(s).
pot	potentiometer.
rcvg	receiving.
readj	readjust, readjustment.
res	resistor.
ret	retardation.
sec	section.
sig	signal.
subpar.(s)	subparagraph(s).
term	terminal.
tg	telegraph.
v	volt(s).
v-f	voice-frequency (adjective).

INDEX

	Paragraph	Page
Abbreviations	App.	90
Adjustment:		
Carrier current	14*c*, 23	16, 31
Loop current	22*b*	30
Oscillator	14*e*, 62	17, 87
Preliminary	13, 24*c*	15, 31
Relay	44, 61	59, 83
Send bias	17	26
Amplifier detector	43*b*	57
Armature travel	61*e*	86
Army Air Forces Unsatisfactory Report (fig. 27)	39	49
Band-pass filter	40*d*, 41*b*	52, 53
Burnishing	30*d*, 61*c*	36, 83
Capacitor (electrolytic)	63*c*	88
Carrier—		
Circuits	40	49
Current adjustment	14*c*, 23	16, 31
Frequencies	4, 40*b*	11, 51
Receiver test	14*d*	17
Supply (fig. 30)	42*b*	54
Clean (C) (see FITCAL)		
Cleaning fluid	29*c*	35
Component parts	2*a*	3
Connections:		
Line (figs. 17 and 18)	15*a*	18
Loop (figs. 19 and 20)	15*b*	18
Power	12*c*	15
Tandem (fig. 21)	15*d*	23
Contact:		
Burnishing	30*d*, 61*c*	36, 83
Surfaces	61*c*	83
Cover switch	56*g*	78
Current (loop)	16*d*	25
Differences in model	5	11
Dimensions	2*a*, 9*a*	3, 12
Disassembly	9	12
Drawings	59	83
Dry-cleaning fluid	29*d*	35
Electrical characteristics	4	11
Electrolytic capacitors	63*c*	88
Filament activity	14*b*	16
Filters	40*d*, 41*b*, 56*e*	52, 53, 76
FITCAL	29	34
Frequencies (carrier)	40*b*	51
Functioning of equipment	40	49
Fungiproofing (*see also* moistureproofing and fungiproofing)	35–37	41
Fuses (power supply)	12*c*	15
Gas adsorbing unit	61*f*	87
Gauges	61	83
Grid-current test	14*b*	16
Grid emission	56*f*	77
Grid trouble	56*f*	77

	Paragraph	Page
Grounding	12*b*	15
Input level	4*b*	11
Inspect. (*See* FITCAL.)		
Interference test	21	29
Intermodulation	41*c*	53
Jack:		
OSC OUT	3*c*	5
RECEIVER CURRENT	3*b*	5
RELAY TEST	3*b*	5
SEND BIAS	3*b*	5
SL CURRENT and RL CURRENT	3*b*	5
Level compensator	43*c*	58
Levels:		
Input	4*b*, 43*c*, *d*	11, 58
Output	4*b*, 42*c*	11, 56
Line connections	15*b*	18
Line-up, system	16	24
Loop:		
Connections	15*c*	20
Circuit test	22	30
Lubrication	33	41
Maintenance instructions	28	34
Modulation	41	53
Moistureproofing and fungiproofing	34–37	41
Monitoring teletypewriter arrangement	55	72
Net loss in telephone facilities	16	24
Operating instructions	12–27	15
Operation	41	53
Oscillator	42*b*	54
Oscillator adjustment	14*e*, 62	17, 87
Output level	4*b*, 42*c*	11, 56
Overloading	41*d*	54
Packing	9	12
Point-to-point voltages	58	79
Polarential	51	64
Polar relay	30*d*, 44, 61	36, 59, 83
Adjustment	61	83
Testing circuit	45	59
Polar (two-path)	52	69
Power circuits	56, 63	73, 87
Preventive maintenance:		
Check list	32	41
Meaning of	28	34
Tools and materials	31	41
Range	7	11
Receiver adjustment	14*d*	17
Receiving:		
Circuit	43	57
Filter	40*d*, 41*b*	52, 53
Records	25	32
Rectifier	63*d*	88
Rectifier circuit	56, 63	73, 87
Regulation	56*c*	76
Relay, time delay	56*c*	76
Relays, polar	44	59
Repacking instructions	11	14

	Paragraph	Page
Repair instructions	38–68	49
Repairs	60–63	83
Schematic drawings	59	83
Send bias	17	26
Sending:		
Circuit	42	54
Filter	40*d*, 41*b*	52, 53
Setting-up instructions	10	14
Solvent, dry-cleaning	29*d*	35
Summary of procedure	24	31
System line-up	16	24
Tandem connections	15*d*, 54	23, 69
Teletypewriters, monitoring	16, 55	24, 72
Test equipment	57	79
Tighten. (*See* FITCAL.)		
Time-delay relay	56*c*	76
Tools	31, 61*b*	41, 83
Transconductance test	14*b*	16
Transmission level	4*b*, 42*c*	11, 56
Trouble location	57–59	79
Two-path polar	52	69
Unpacking instructions	9	12
Unsatisfactory Equipment Report	39	49
Vacuum tube:		
Operation	42, 43, 56*f*	54, 57, 77
Testing	14*b*	16
Varistors	63*d*	88
Volume, cubic	2*a*, 9*a*	3, 12
War Department Unsatisfactory Equipment Report (fig. 26)	39	49
Weight	2*a*, 9*a*	3, 12
Wiring diagrams	59	83

U. S. GOVERNMENT PRINTING OFFICE: 1946—706386

	Paragraph	Page
Repair instructions	38–68	49
Repairs	60–63	83
Schematic drawings	59	83
Send bias	17	26
Sending:		
Circuit	42	54
Filter	40*d*, 41*b*	52, 53
Setting-up instructions	10	14
Solvent, dry-cleaning	29*d*	35
Summary of procedure	24	31
System line-up	16	24
Tandem connections	15*d*, 54	23, 69
Teletypewriters, monitoring	16, 55	24, 72
Test equipment	57	79
Tighten. (*See* FITCAL.)		
Time-delay relay	56*c*	76
Tools	31, 61*b*	41, 83
Transconductance test	14*b*	16
Transmission level	4*b*, 42*c*	11, 56
Trouble location	57–59	79
Two-path polar	52	69
Unpacking instructions	9	12
Unsatisfactory Equipment Report	39	49
Vacuum tube:		
Operation	42, 43, 56*f*	54, 57, 77
Testing	14*b*	16
Varistors	63*d*	88
Volume, cubic	2*a*, 9*a*	3, 12
War Department Unsatisfactory Equipment Report (fig. 26)	39	49
Weight	2*a*, 9*a*	3, 12
Wiring diagrams	59	83

U. S. GOVERNMENT PRINTING OFFICE: 1946—706386

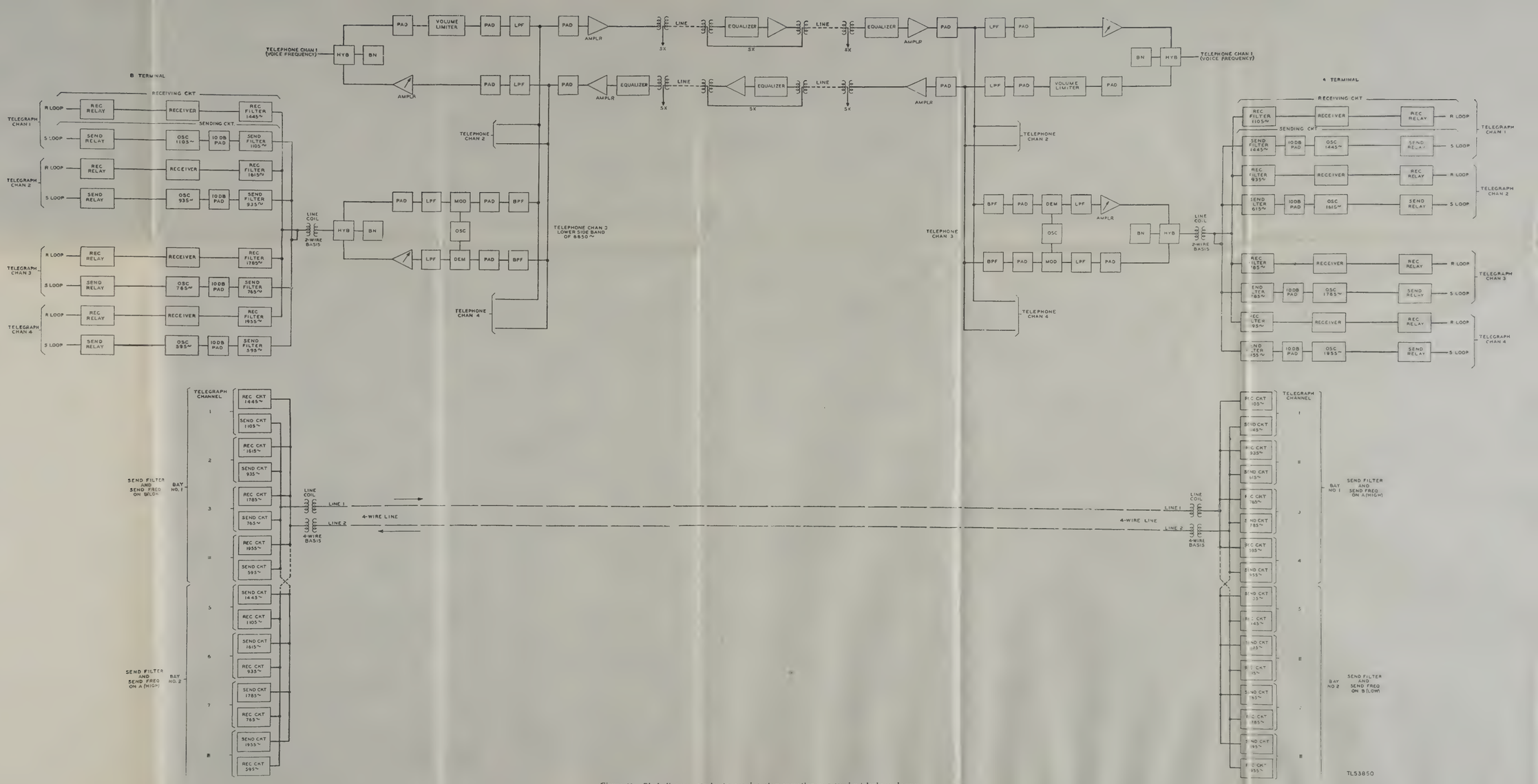

Figure 49. Block diagram, carrier telegraph system operating on a carrier telephone channel

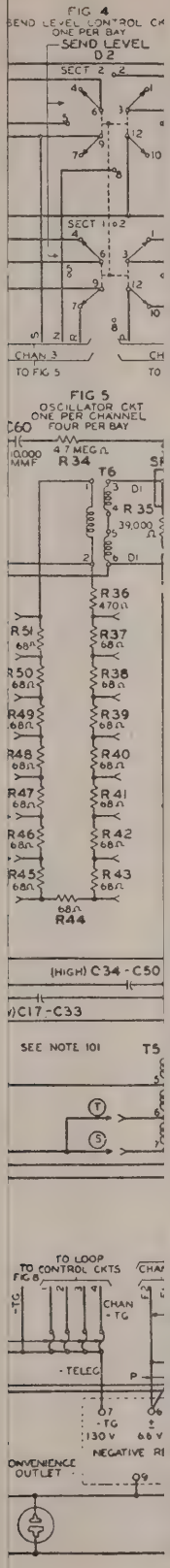
FIG 4
SEND LEVEL CONTROL CK
ONE PER BAY
SEND LEVEL
D2
SECT 2
SECT 1 to 2
CHAN 3
TO FIG 5
FIG 5
OSCILLATOR CKT
ONE PER CHANNEL
FOUR PER BAY
C60
10,000 MMF
4.7 MEG Ω
R34
T6
R 35
39,000 Ω
R36
470 Ω
R37
R38
R39
R40
R41
R42
R43
R44
R45
R46
R47
R48
R49
R50
R51
68 Ω
(HIGH) C34 - C50
C17 - C33
SEE NOTE 101
T5
TO LOOP
TO CONTROL CKTS
FIG 8
CHAN
- TG
- TELEG
07
- TG
130 V
66 V
NEGATIVE RE
CONVENIENCE
OUTLET
09

Figure 50.

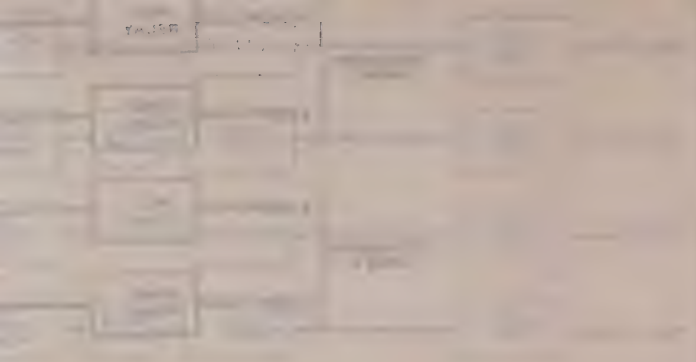

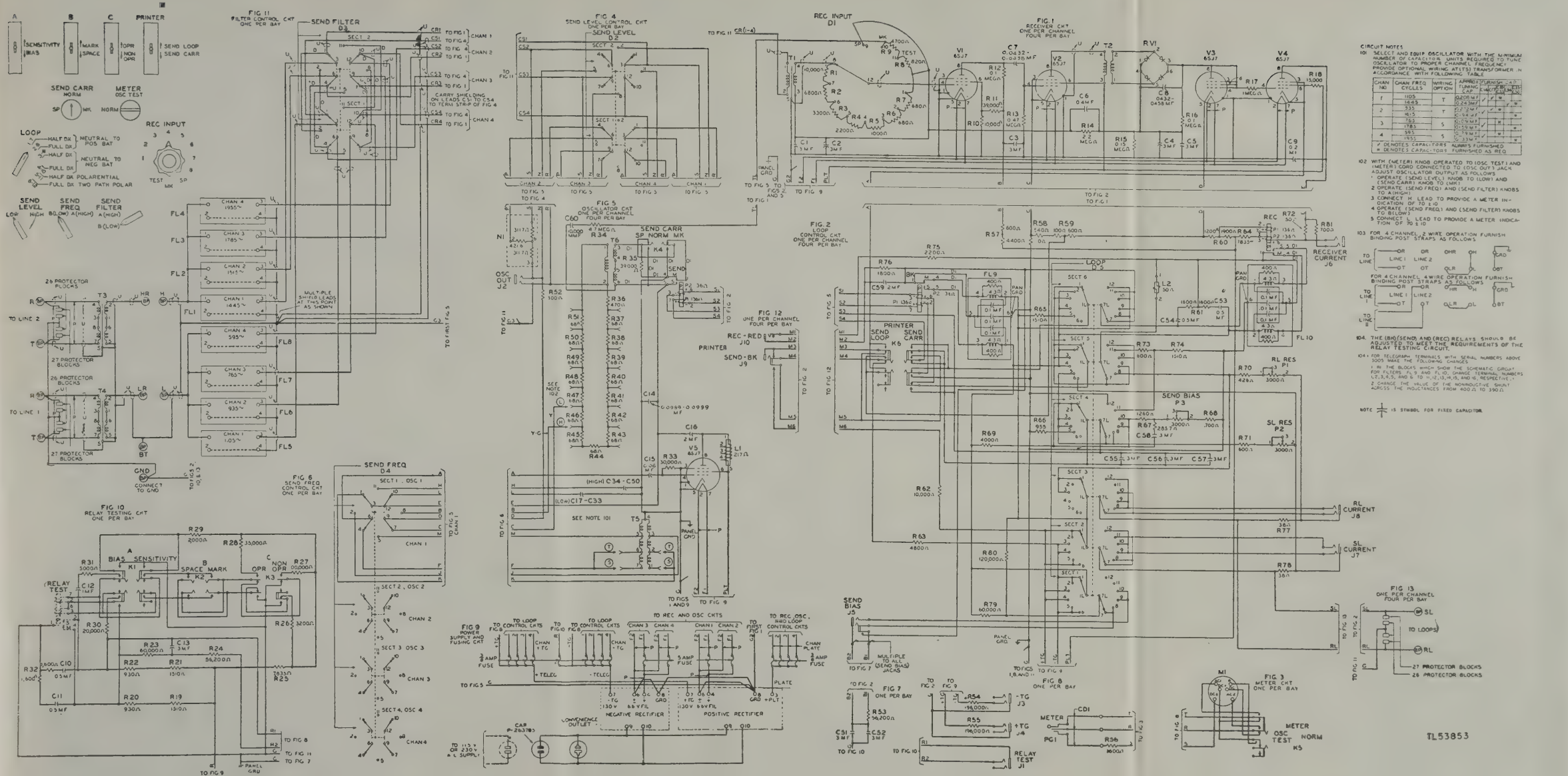

Figure 50. Channel terminal and oscillator circuit, schematic diagram.

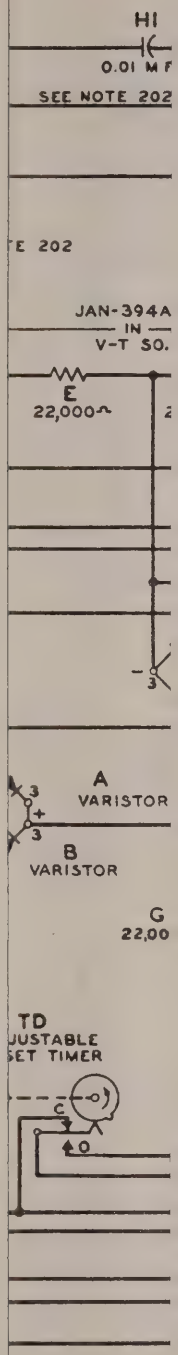
HI
0.01 M F
SEE NOTE 202
E 202
JAN-394A
IN
V-T SO.
E
22,000
3
A
VARISTOR
3
+
3
B
VARISTOR
G
22,00
TD
JUSTABLE
SET TIMER
C
O

Figu

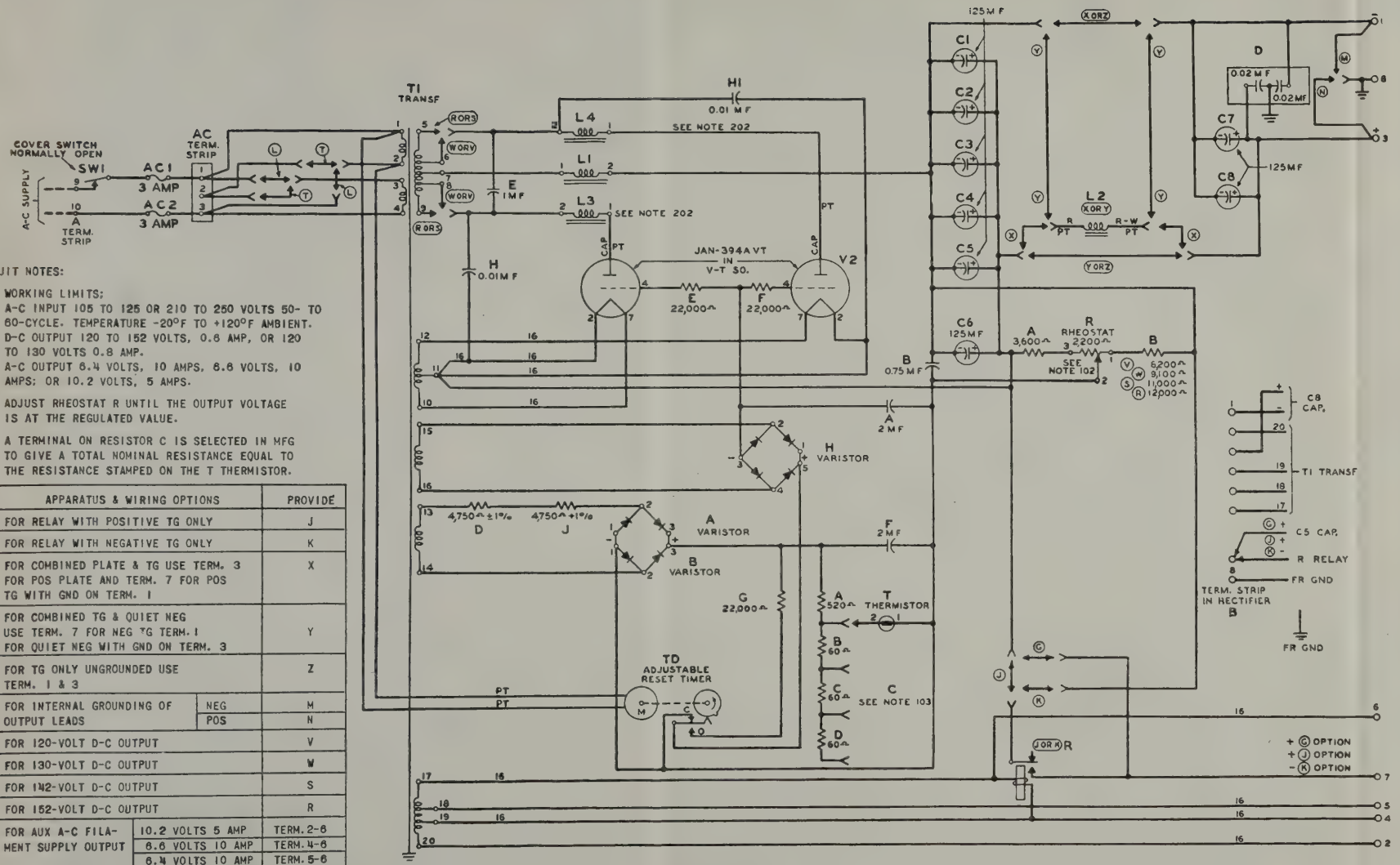

NOTE ⊣⊢ IS SYMBOL FOR FIXED CAPACITOR

CIRCUIT NOTES:

101. WORKING LIMITS:
A-C INPUT 105 TO 125 OR 210 TO 250 VOLTS 50- TO 60-CYCLE. TEMPERATURE -20°F TO +120°F AMBIENT.
D-C OUTPUT 120 TO 152 VOLTS, 0.6 AMP, OR 120 TO 130 VOLTS 0.8 AMP.
A-C OUTPUT 6.4 VOLTS, 10 AMPS, 6.6 VOLTS, 10 AMPS; OR 10.2 VOLTS, 5 AMPS.

102. ADJUST RHEOSTAT R UNTIL THE OUTPUT VOLTAGE IS AT THE REGULATED VALUE.

103. A TERMINAL ON RESISTOR C IS SELECTED IN MFG TO GIVE A TOTAL NOMINAL RESISTANCE EQUAL TO THE RESISTANCE STAMPED ON THE T THERMISTOR.

104.

APPARATUS & WIRING OPTIONS		PROVIDE
FOR RELAY WITH POSITIVE TG ONLY		J
FOR RELAY WITH NEGATIVE TG ONLY		K
FOR COMBINED PLATE & TG USE TERM. 3 FOR POS PLATE AND TERM. 7 FOR POS TG WITH GND ON TERM. 1		X
FOR COMBINED TG & QUIET NEG USE TERM. 7 FOR NEG TG TERM. 1 FOR QUIET NEG WITH GND ON TERM. 3		Y
FOR TG ONLY UNGROUNDED USE TERM. 1 & 3		Z
FOR INTERNAL GROUNDING OF OUTPUT LEADS	NEG	M
	POS	N
FOR 120-VOLT D-C OUTPUT		V
FOR 130-VOLT D-C OUTPUT		W
FOR 142-VOLT D-C OUTPUT		S
FOR 152-VOLT D-C OUTPUT		R
FOR AUX A-C FILAMENT SUPPLY OUTPUT	10.2 VOLTS 5 AMP	TERM. 2-8
	6.6 VOLTS 10 AMP	TERM. 4-8
	6.4 VOLTS 10 AMP	TERM. 5-8
FOR 120-VOLT A-C INPUT		L
FOR 240-VOLT A-C INPUT		T
FOR POS TG WITHOUT RELAY		G

105. TEST RELAY R COLD FOR OPERATION ON 5.9 VOLTS AC; READJUST ON 5.5 VOLTS AC.

EQUIPMENT NOTES:

201. UNLESS OTHERWISE SPECIFIED LEADS ARE 20-GA STRANDED WIRE. 18-GAUGE IS STRANDED WIRE. C4 WIRING IS 16-GAUGE RUN IN A SEPARATE FORM. LEADS MARKED PT ARE PART OF THE APPARATUS.

202. THIS LEAD IS RUN DIRECTLY WITH ONLY SUFFICIENT SLACK TO PERMIT REMOVAL OF TUBE CAP FROM TUBE.

ISSUE 8 REGULATED TUBE RECTIFIER CIRCUIT 120 TO 150 VOLTS 0.6 AMPERE	ES-800456 TL54421S

Figure 51. Regulated tube rectifier circuit, schematic diagram.

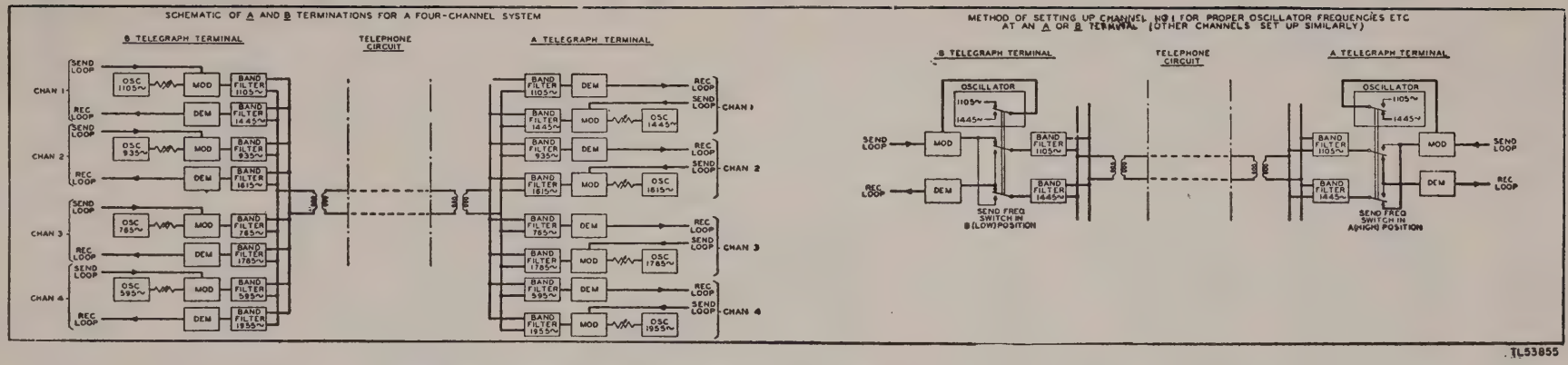

Figure 52. Circuit label, block diagram, Telegraph Terminal CF–2–B (Carrier).

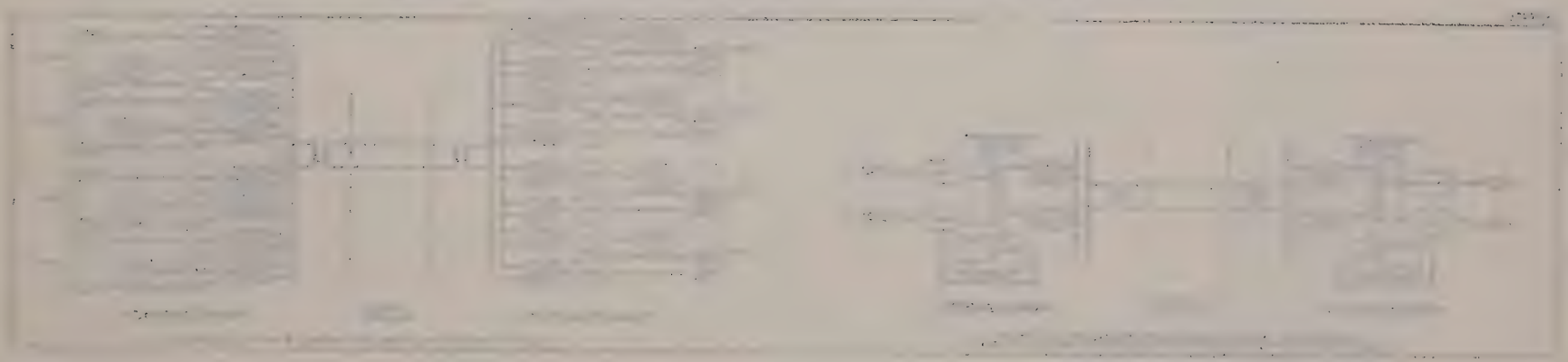

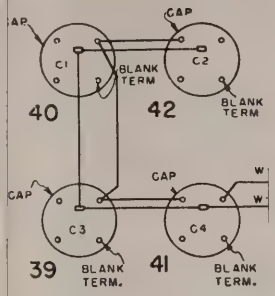

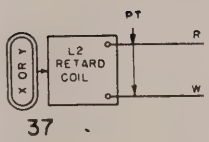

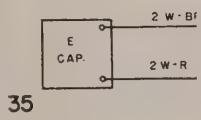

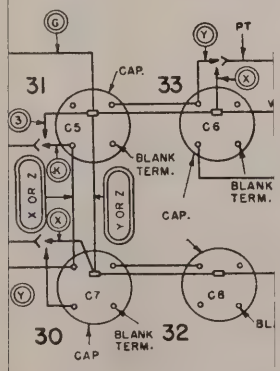

Figure 53. Regulated

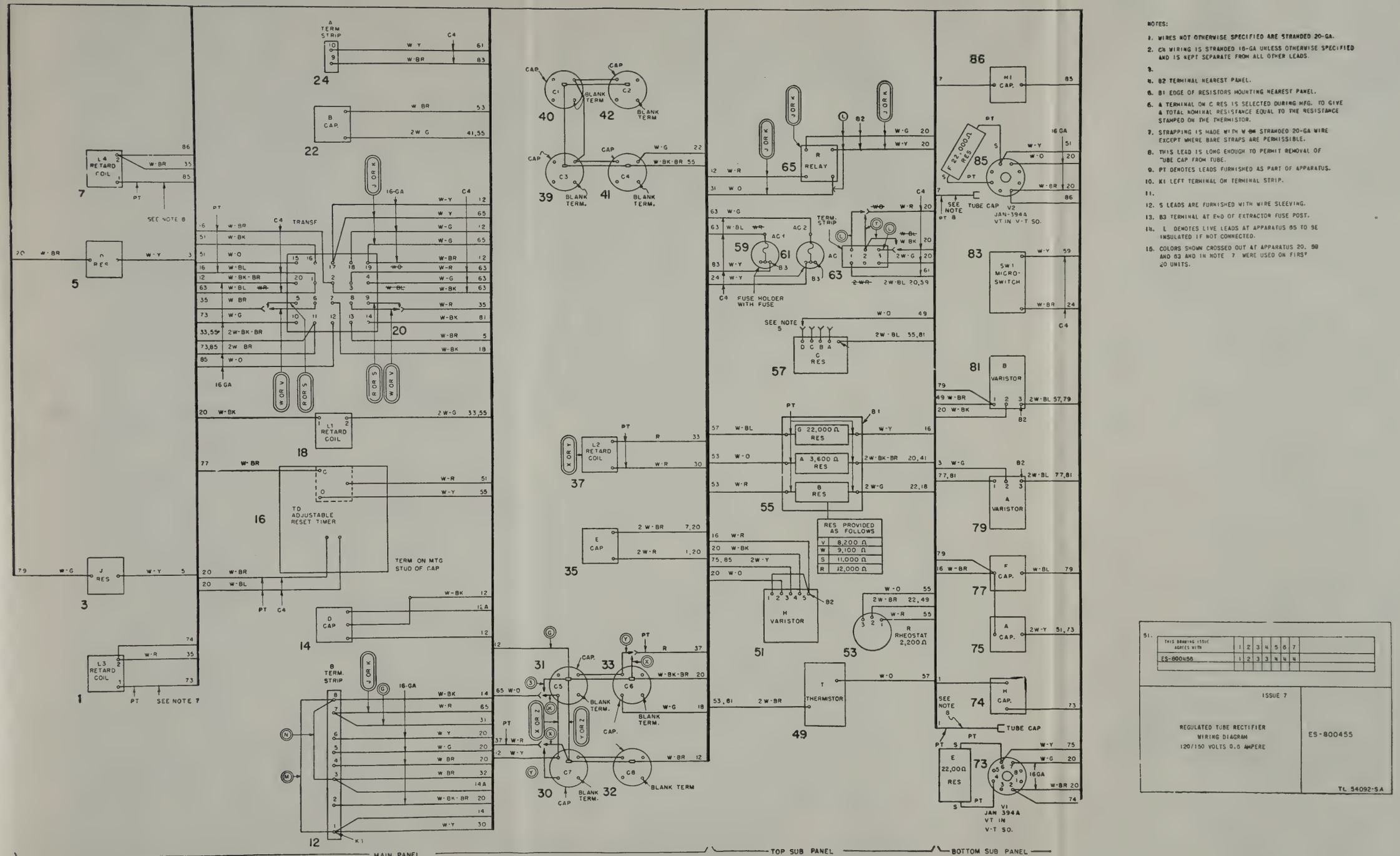

Figure 53. Regulated tube rectifier circuit, wiring diagram.

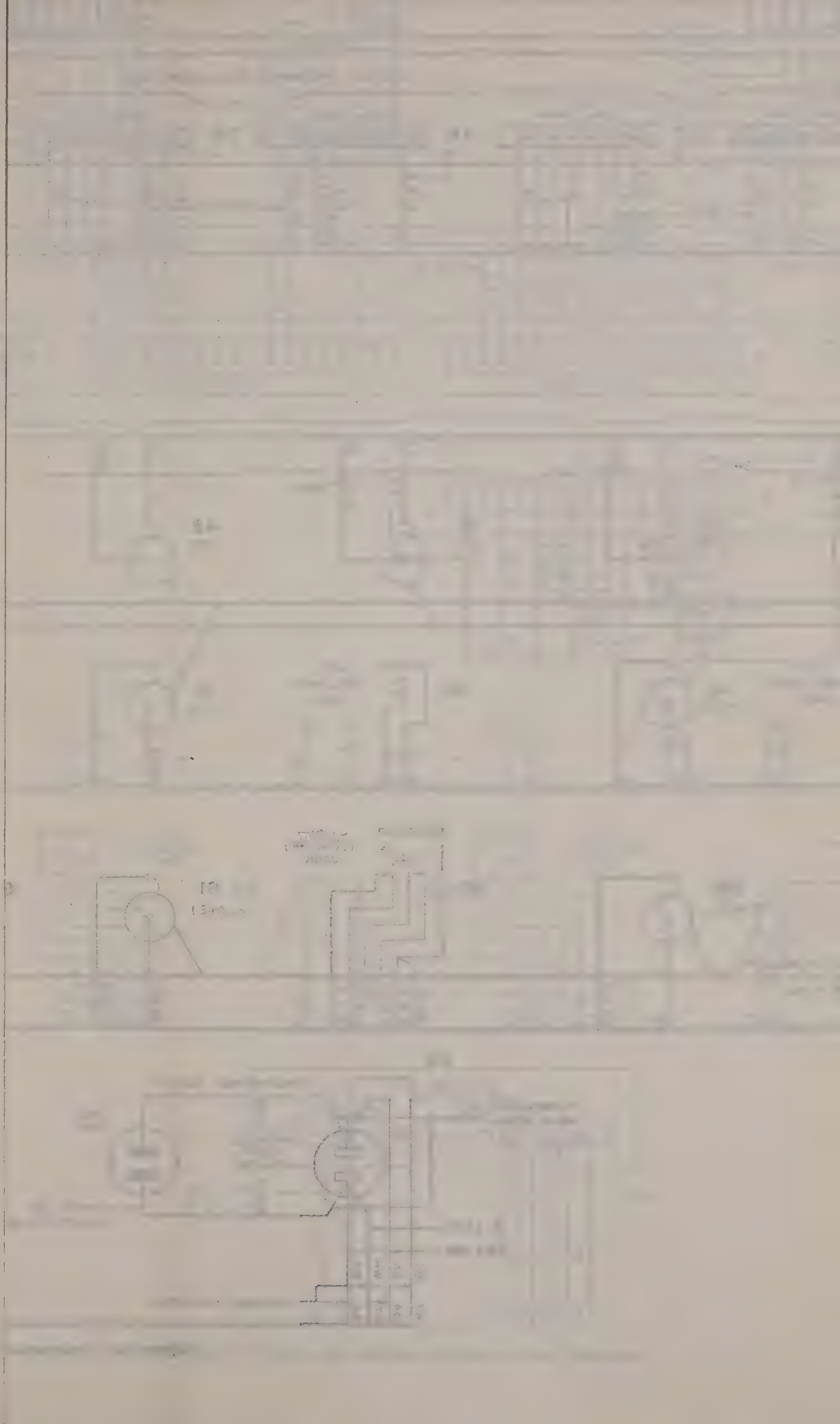

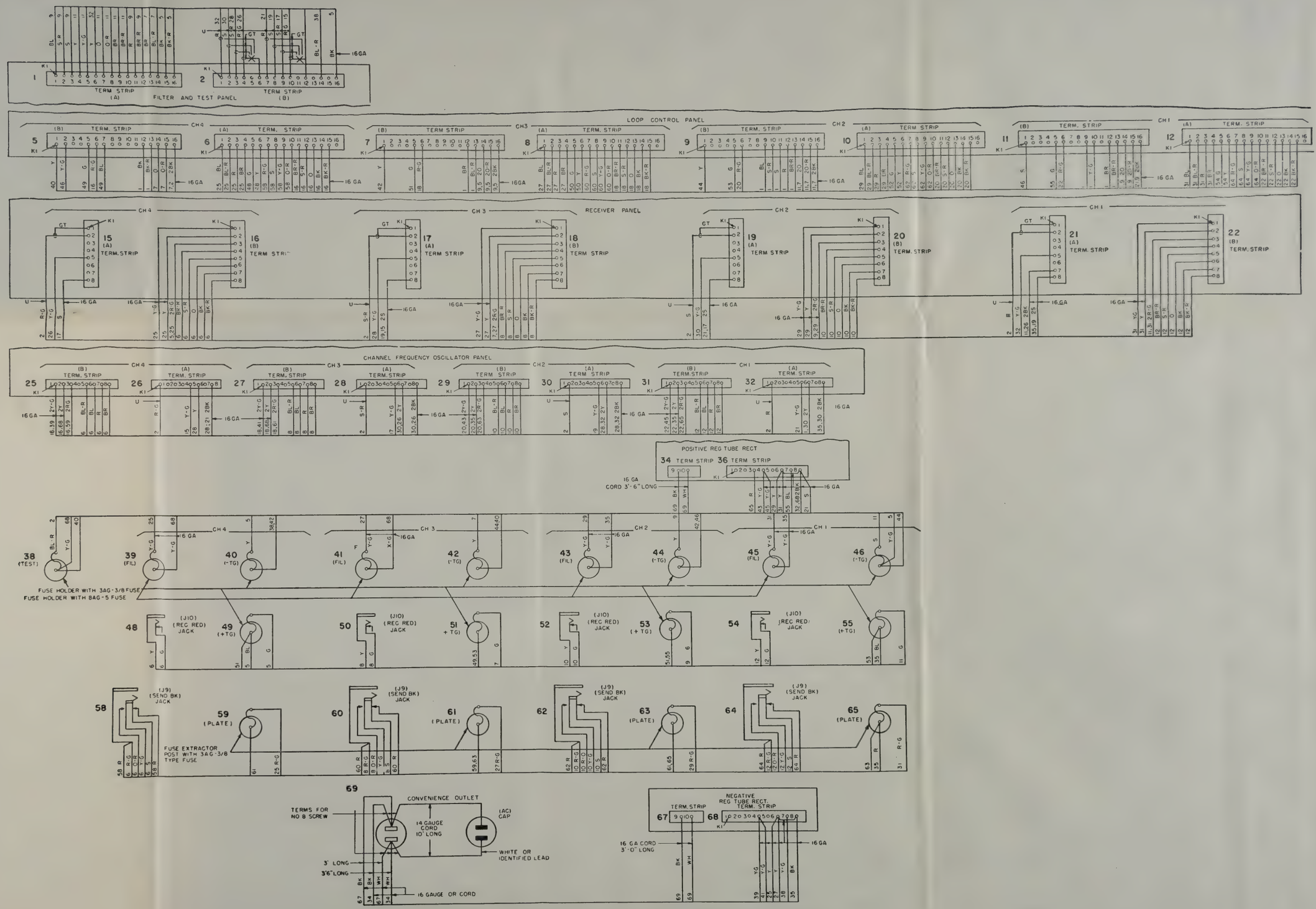

Figure 54. Interconnections for rectifier, channel terminal, and oscillator circuits, wiring diagram.

TL 53859

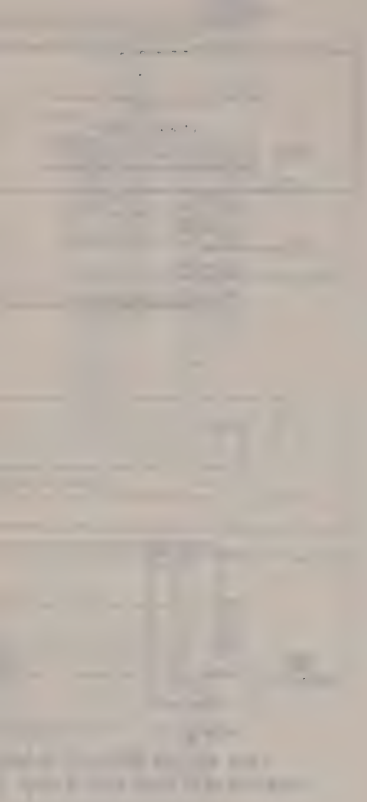

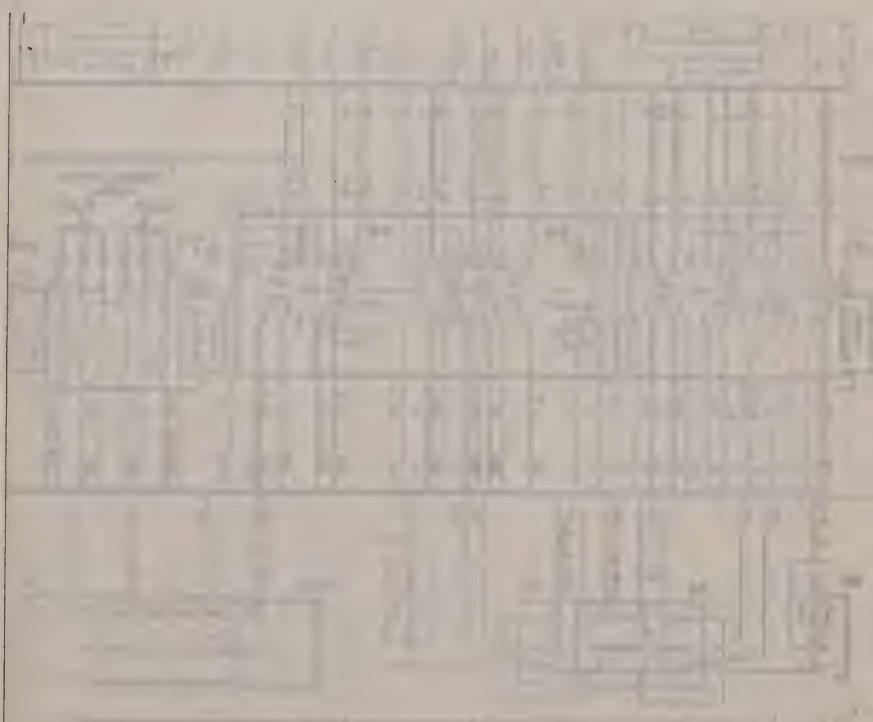

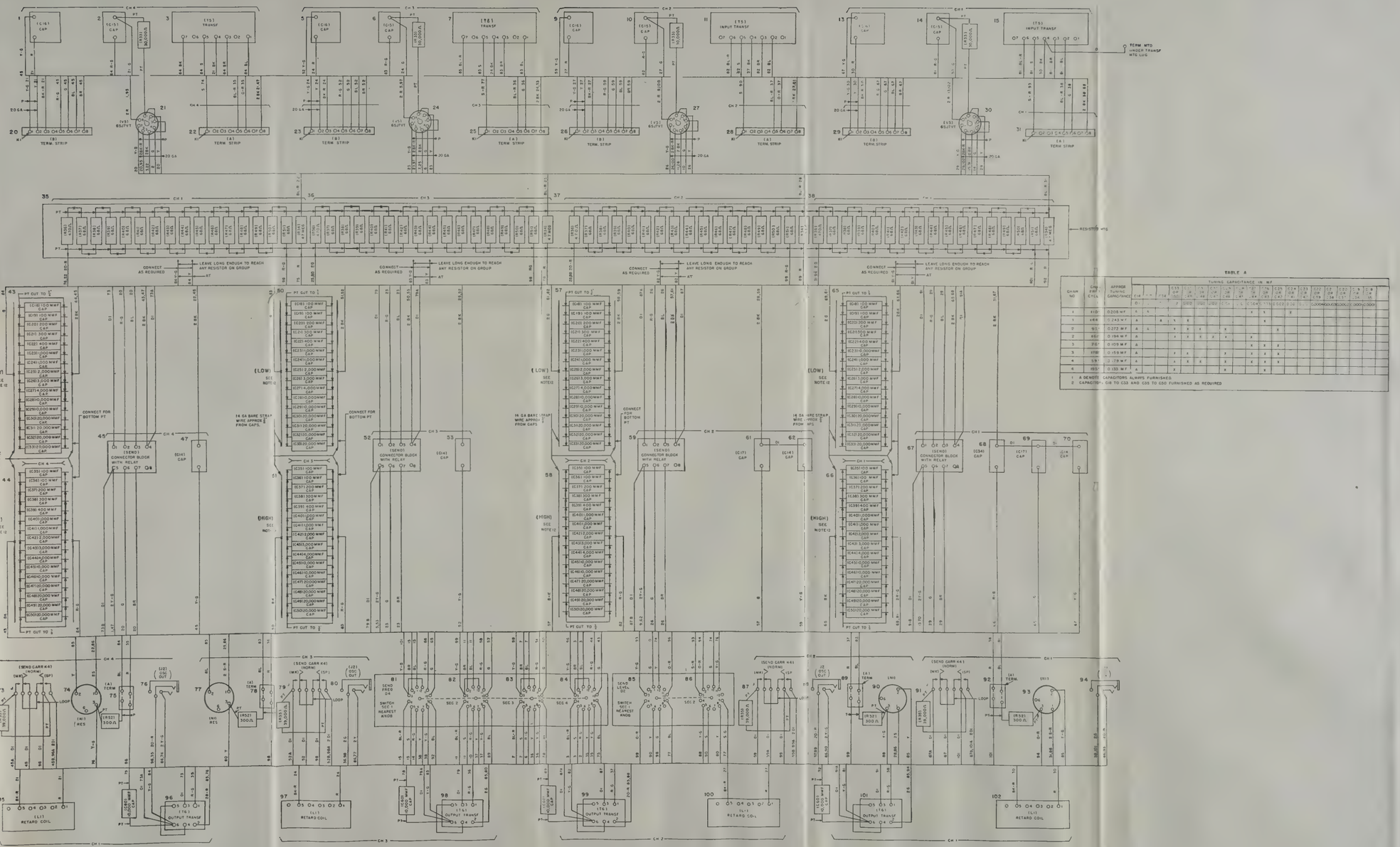

TABLE A

CHAN NO	CRYSTAL CYCLES	APPROX TUNING CAPACITANCE	TUNING CAPACITANCE IN MF																			
			C14	C15	C16	C17	C18	C19	C20	C21	C22	C23	C24	C25	C26	C27	C28	C29	C30	C31	C32	C33
		MF																				
1	410	0.208 MF	A	A										X	X		X					
1	464	0.243 MF	A		A	X																
2	93	0.272 MF	A	A			X	X	X			X						X				
2	462	0.194 MF	A				X	X	X	X	X		X									
3	316	0.159 MF	A										X	X	X							
3	470	0.159 MF	A			X	X		X				X	X	X							
4	59	0.139 MF	A			X	X	X	X				X	X	X							
4	195	0.135 MF	A			X			X				X	X	X							

1. A DENOTES CAPACITORS ALWAYS FURNISHED.
2. CAPACITORS C18 TO C33 AND C35 TO C50 FURNISHED AS REQUIRED

Figure 55. Channel frequency oscillator circuit, wiring diagram.

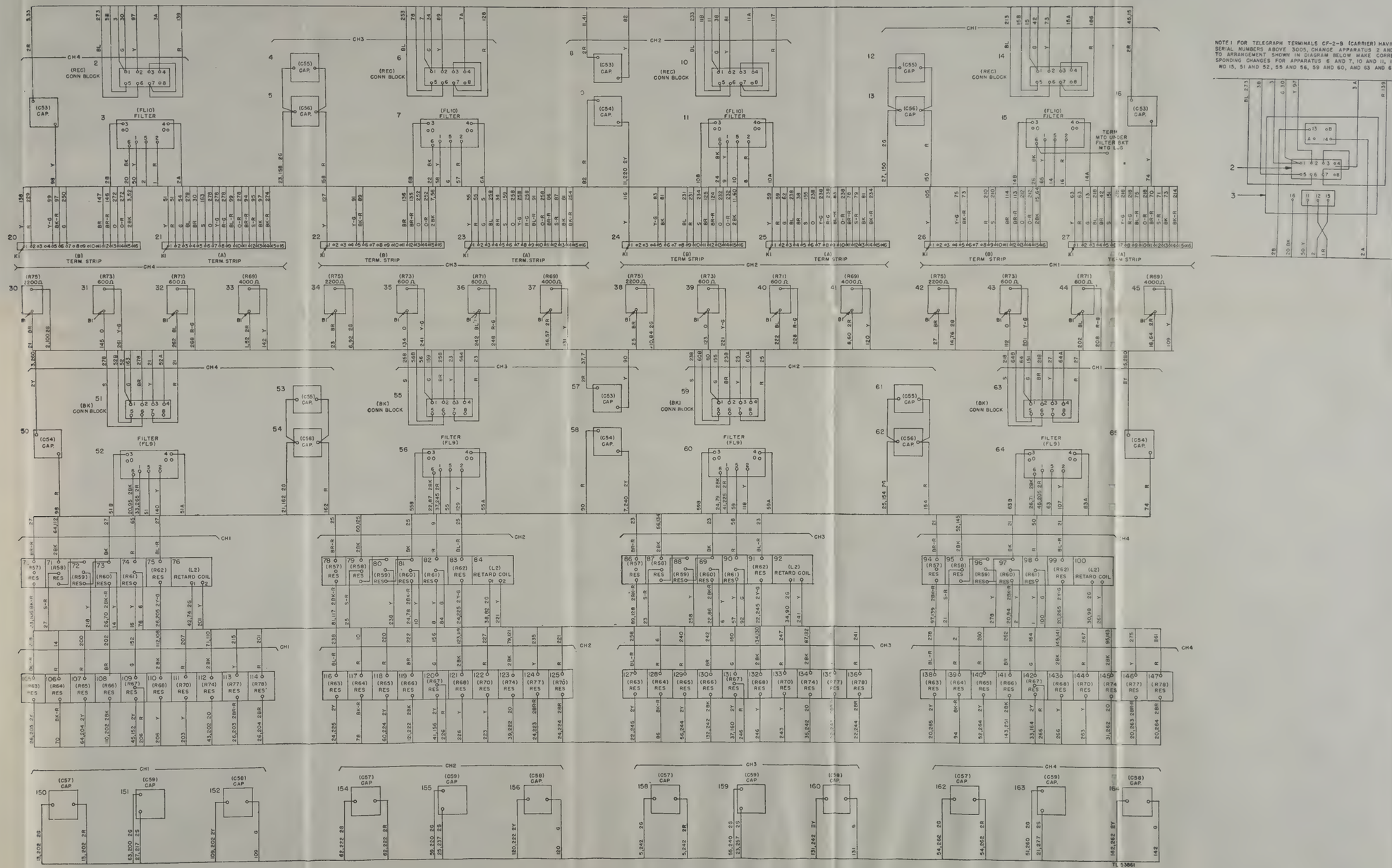

Figure 56. Loop control circuit, wiring diagram, sheet 1.

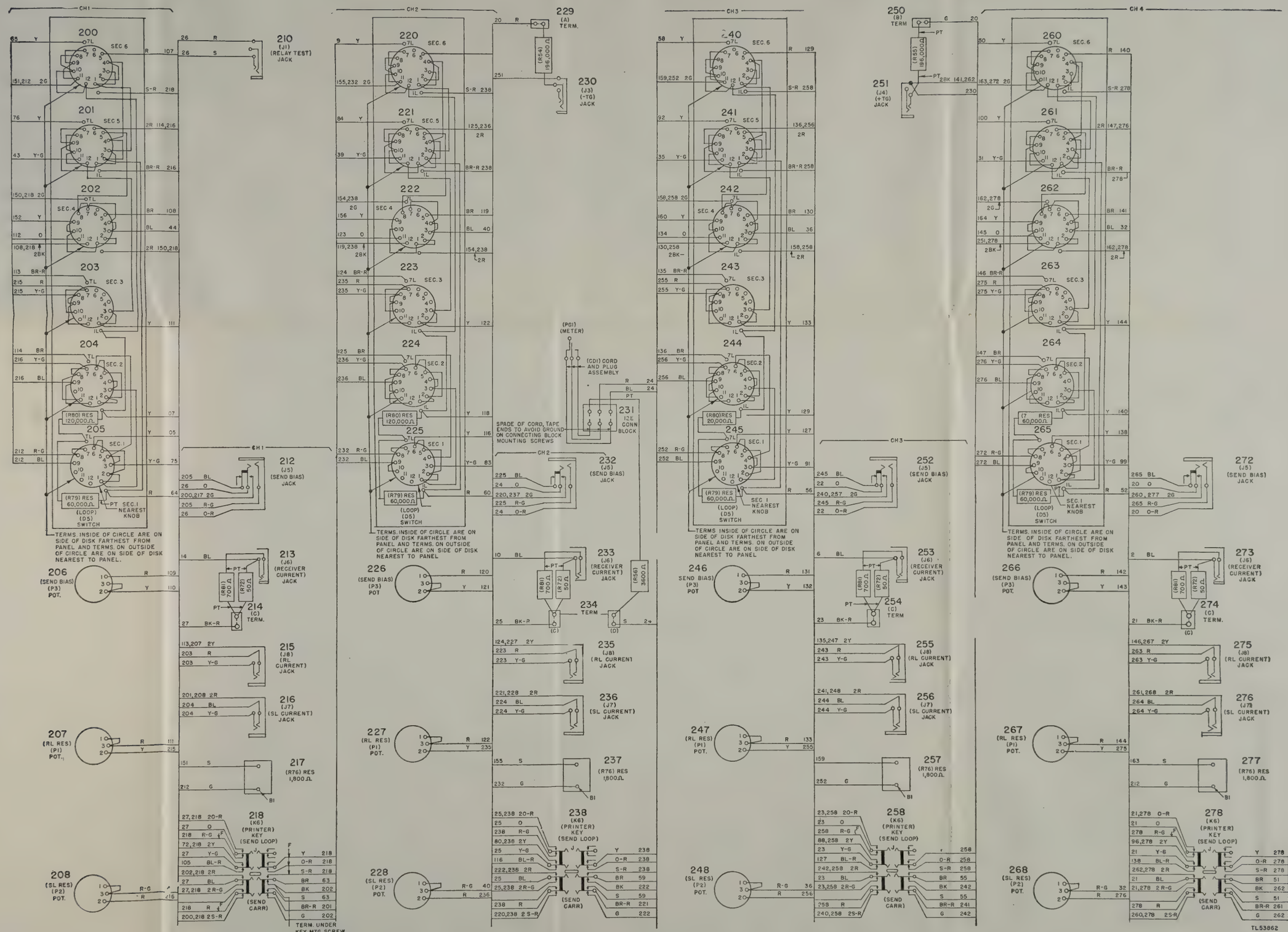

Figure 57. Loop control circuit, wiring diagram, sheet 2.

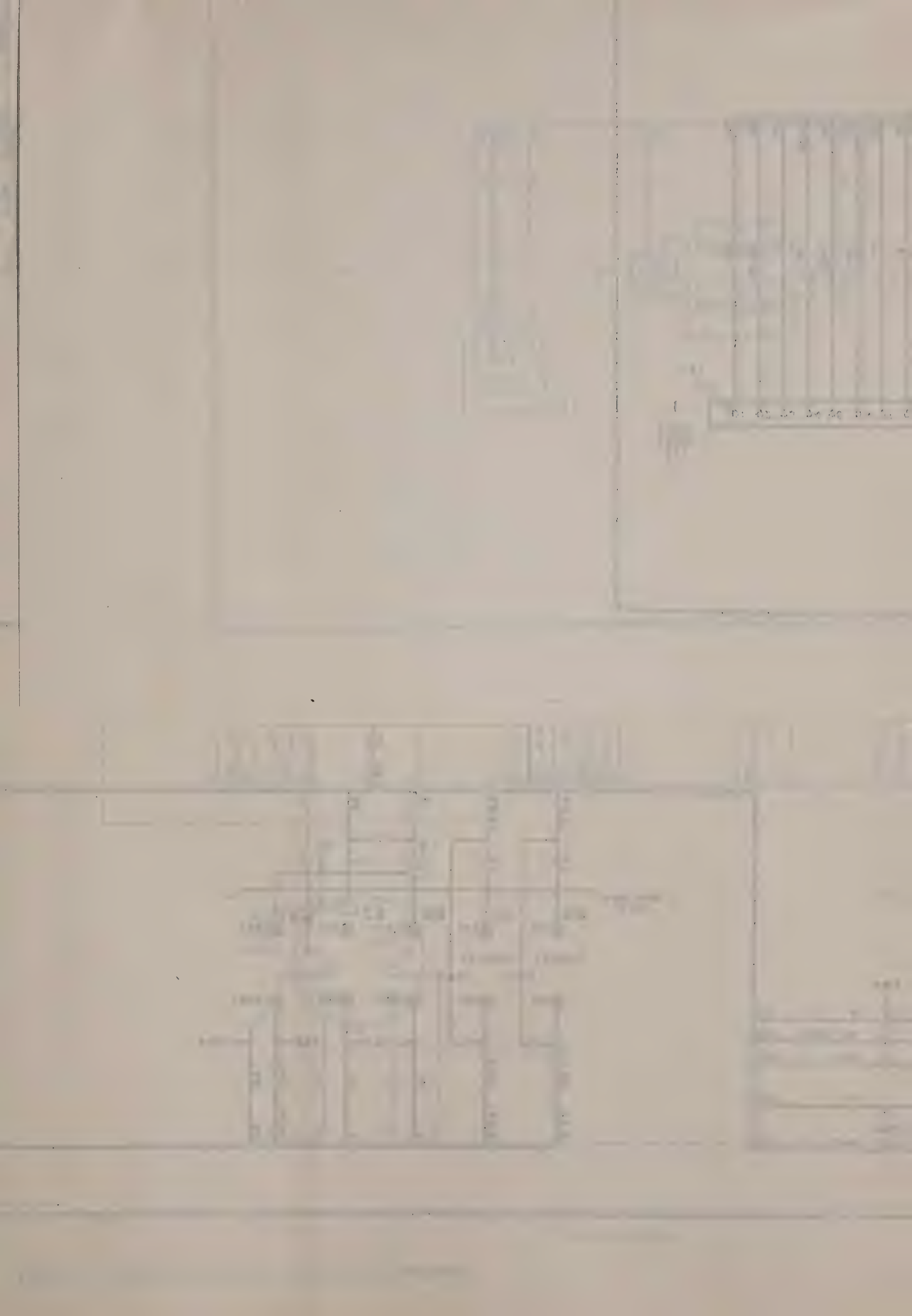

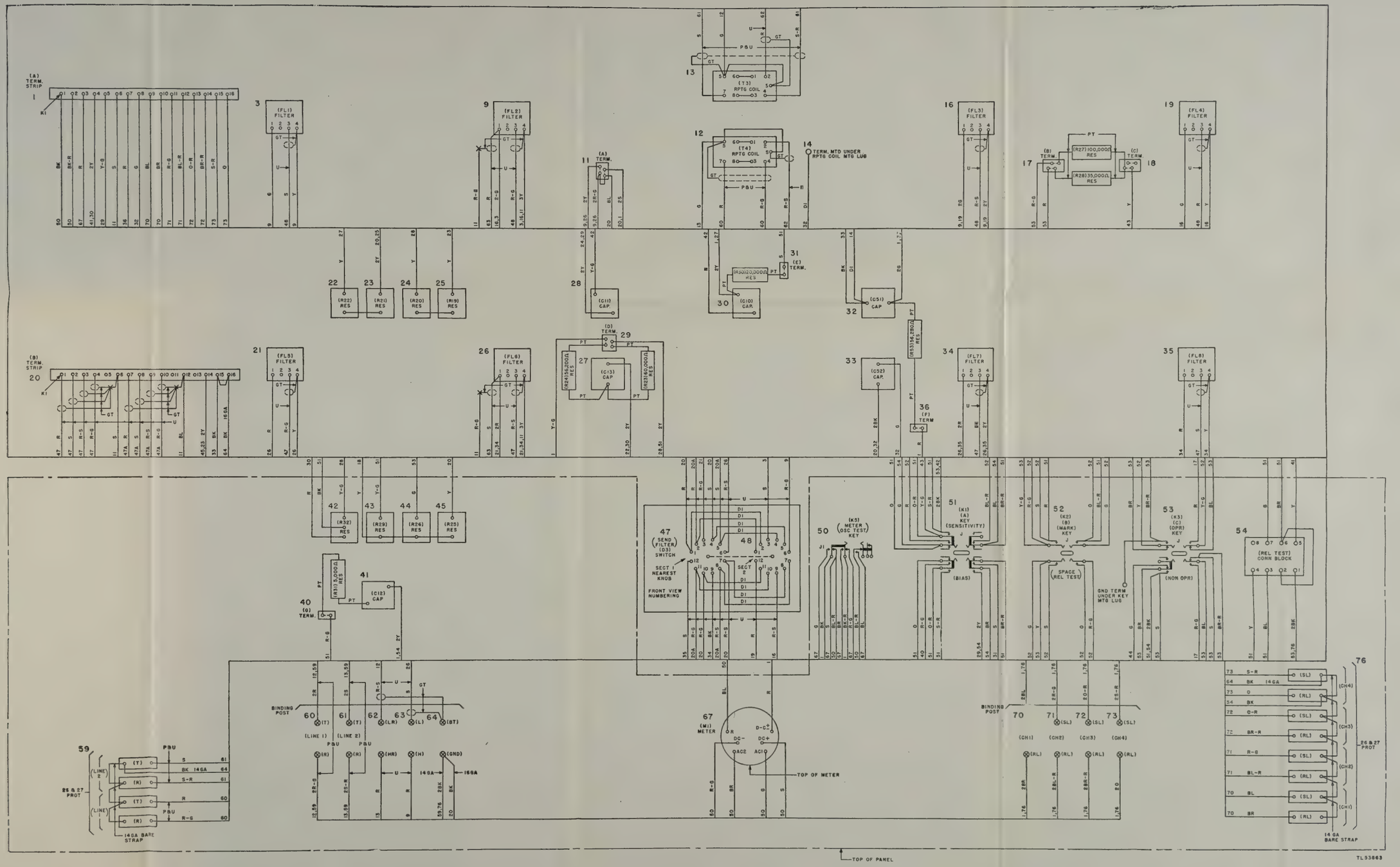

Figure 58. Filter and relay test circuit, wiring diagram

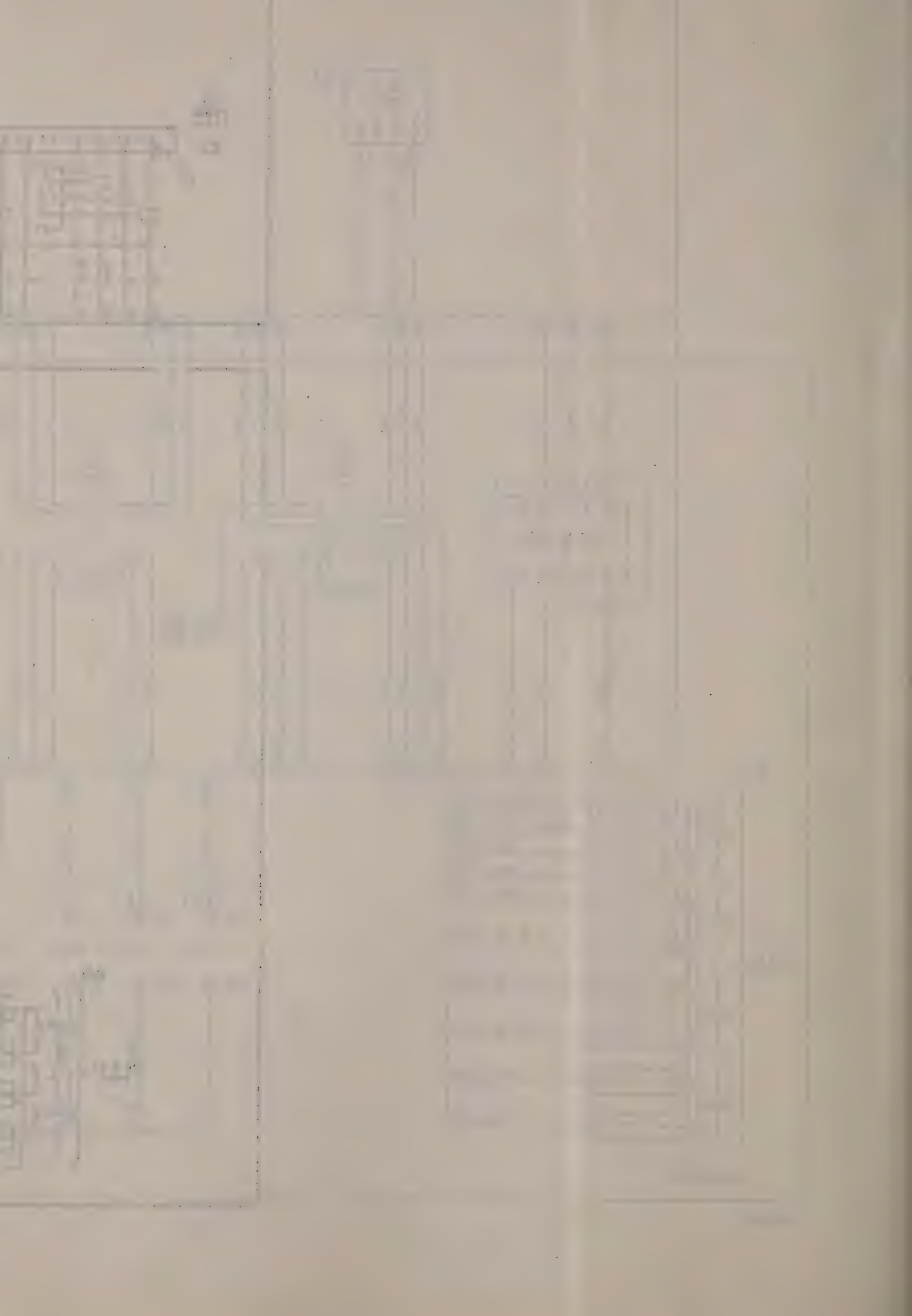

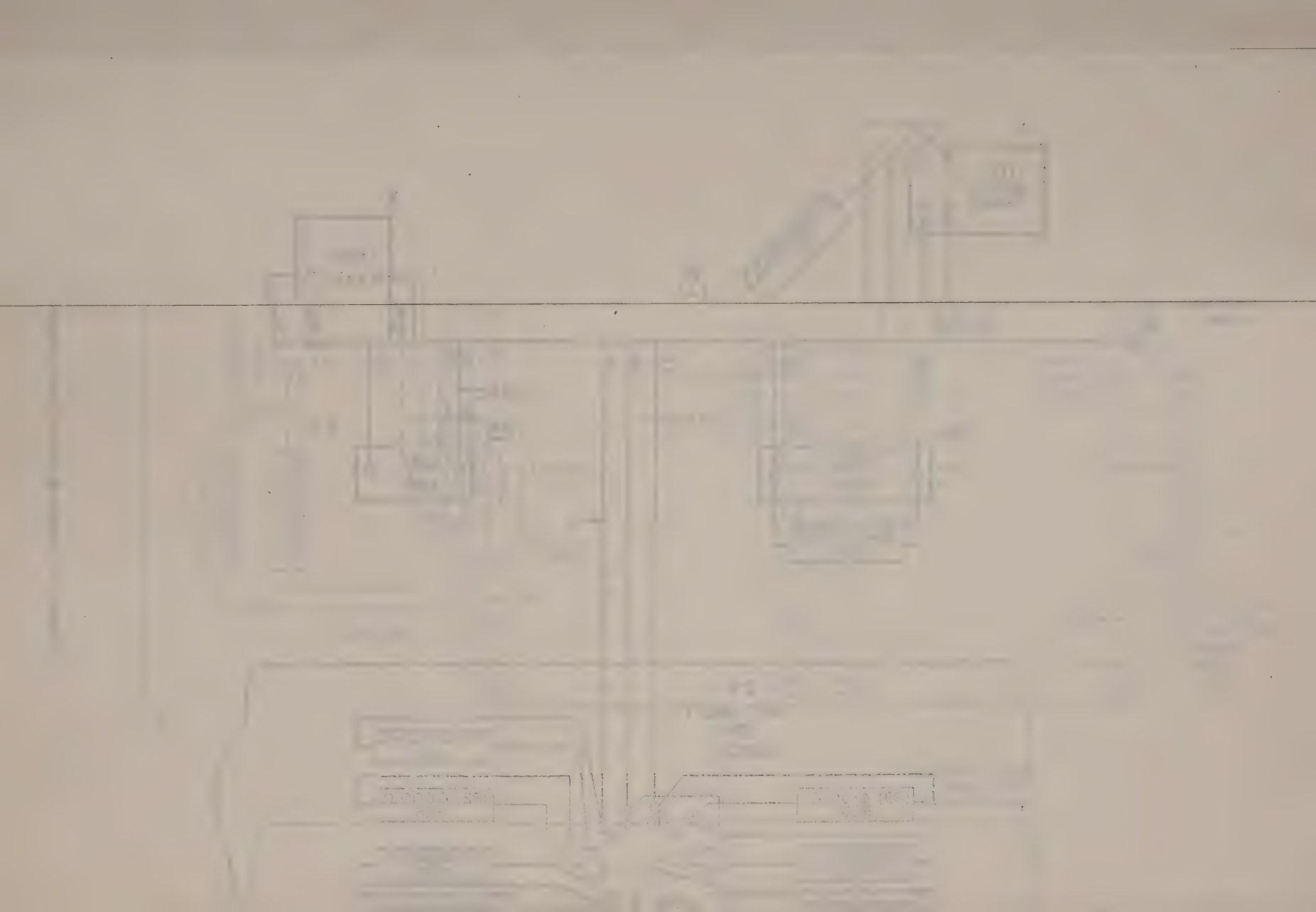

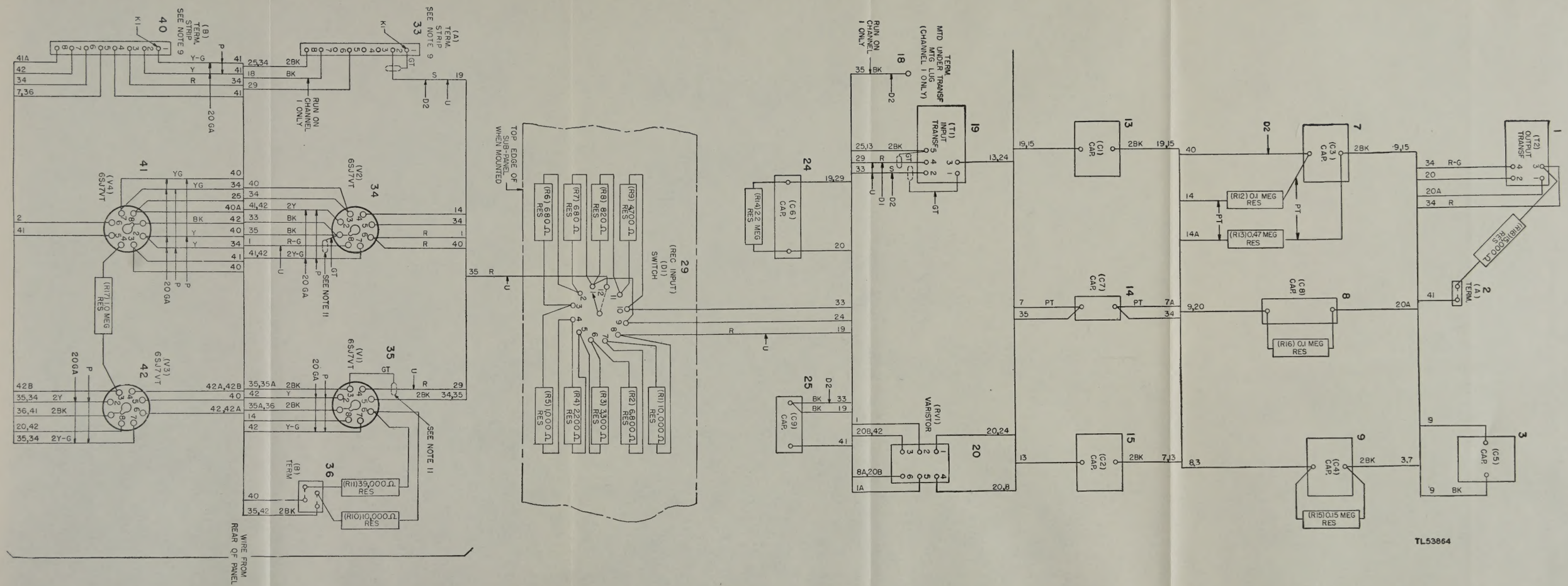

Figure 59. Receiving circuit, wiring diagram.

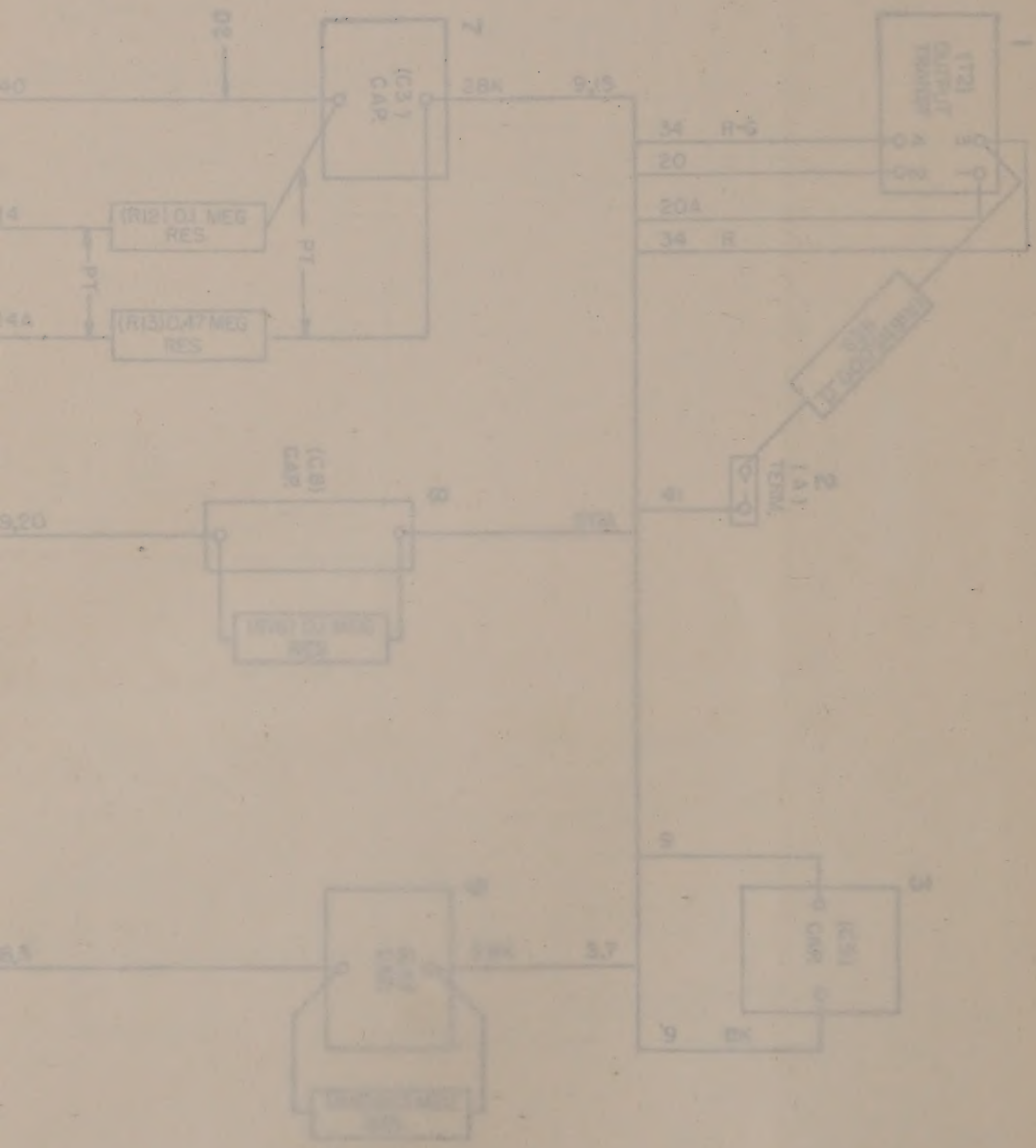

(C3) CAP.
(R12) 0.1 MEG RES.
(R13) 0.47 MEG RES.
(C8) CAP.
(A) TERM.
(T2) OUTPUT TRANSF.

TL53864